POWER NETWORK METER

ND30PNET

USER'S MANUAL

Contents

1 APPLICATION 2
2 METER SET 2
3 BASIC REQUIREMENTS, OPERATIONAL SAFETY 3
4 INSTALLATION 4
5 DESCRIPTION OF THE INSTRUMENT 5
5.1 Current inputs 5
5.2 Voltage inputs 5
5.3 External connections diagram 5
6 OPERATION OF THE METER 10
6.1 Front panel 10
6.2 Starting operation 12
6.3 Language selection 12
7 CONFIGURATION OF THE METER PARAMETERS 13
7.1 Measurement 16
7.2 Parameters 17
7.3 Alarms 20
7.4 Analog output 24
7.5 Displaying 25
7.6 Ethernet / Profinet 30
7.7 Modbus 31
7.8 Settings 31
7.9 Information 32
8 SERIAL INTERFACES 33
8.1 RS485 INTERFACE – the list of parameters 33
8.2 Examples of registers reading and saving 33
8.3 Ethernet / Profinet 36
9 MAP OF REGISTERS OF ND30PNET METER 38
10 FIRMWARE UPGRADE 57
10.1 Firmware upgrade - of the main program of the meter 57
11 ERROR CODES 58
12 TECHNICAL DATA 59
13 ORDERING CODES 62

1 APPLICATION

ND30PNET meter is a digital programmable instrument designed to measure network parameters of single-phase 2-wire and three-phase 3 and 4-wire balanced and unbalanced systems. The measured values are displayed on a color graphic screen TFT 3.5” with a resolution of 320 x 240 pixels. The meter enables the control and optimization of power electronic devices, systems and industrial installations.

It provides measurement of: RMS voltage and current, active, reactive and apparent power, active, reactive and apparent energy, power factor, frequency, harmonic currents and voltages /up to 51st/, THD of current and voltage, average active and apparent power, P Demand, S Demand, averaged current I Demand /15, 30 or 60 minutes/. Voltages and currents are multiplied by given current and voltage transformer ratios of measuring transformers. Indications of power and energy include the values of programmed ratios. The values of the measured quantities can be transmitted to the host system through RS485 interface or Ethernet / Profinet interface, relay outputs signal overruns of the selected parameters, programmable analog output maps the assigned parameter. Depending on the version, the ND30BAC meter has 2 Pt100 temperature inputs or 2 galvanically separated binary inputs.

Temperature inputs can be used to control the temperature of the windings of transformers, motors.

The meter has a galvanic separation between the individual blocks of:

- power supply,
- voltage inputs,
- current inputs,
- RS485 Interface,
- Ethernet/Profinet interface,
- alarm outputs,
- analog output,
- binary inputs,
- Pt100 sensor input.

2 METER SET

Complete set of the meter includes:

1. ND30PNET Meter	1 pc
2. gasket	1 pc
3. mounting brackets to fix the device in the panel	4 pcs
4. connector with 16 screw terminals	1 pc
5. connector with 14 screw terminals	1 pc
6. User’s manual	1 pc

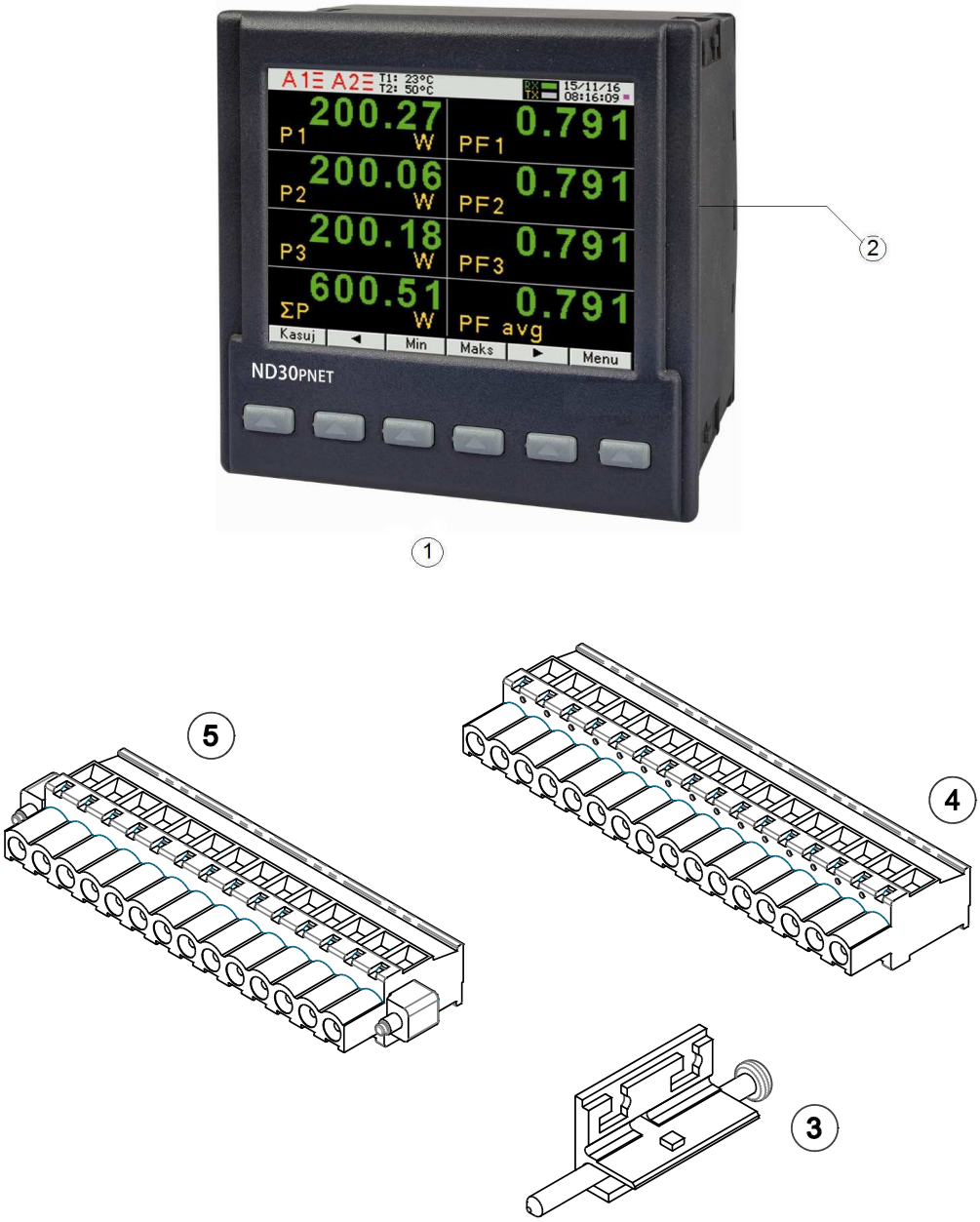

Fig.1. Meter set

3 BASIC REQUIREMENTS, OPERATIONAL SAFETY

In terms of operational safety the meter meets the requirements of EN 61010-1.

Safety precautions:

- The meter installation and connection should be performed by qualified personnel. All available protection requirements must be taken into consideration.
- Prior to turning on the meter verify the connections.
- Prior to removing the meter housing, always turn the supply off and disconnect the measurement circuits.

- Removal of the meter housing during the warranty period voids the warranty.
- The meter meets the requirements for electromagnetic compatibility in industrial environment.
- A switch or a circuit-breaker should be installed in the building or facility. It should be located near the device, easily accessible to the operator and properly marked.

4 INSTALLATION

The meter is adapted to be fixed to the panel by means of mounting brackets, according to fig. 1. The housing of the meter is made of self-extinguishing plastic.

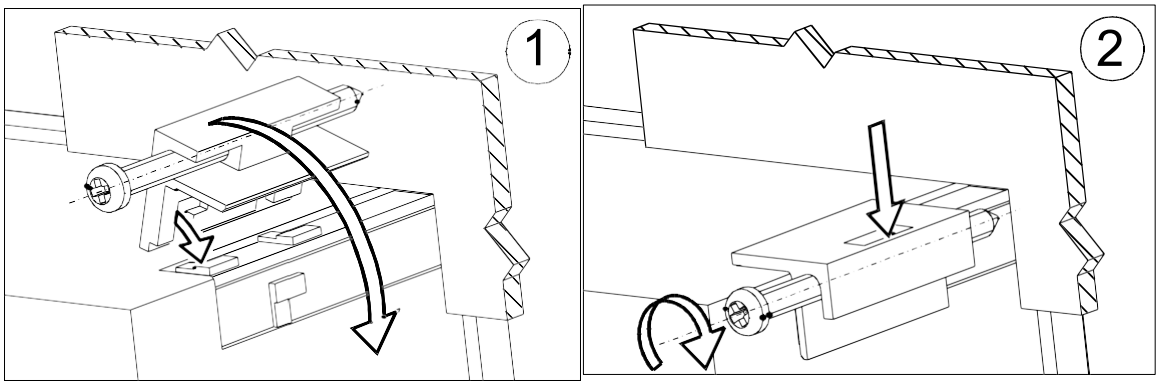

Fig.2. Meter fixing

Housing dimensions 96 x 96 x 77 mm, mounting hole dimensions 92.5 x 92.5 mm. Outside the meter there are screw terminal strips that allow the connection of external wires with diameter up to 2.5 mm^2.

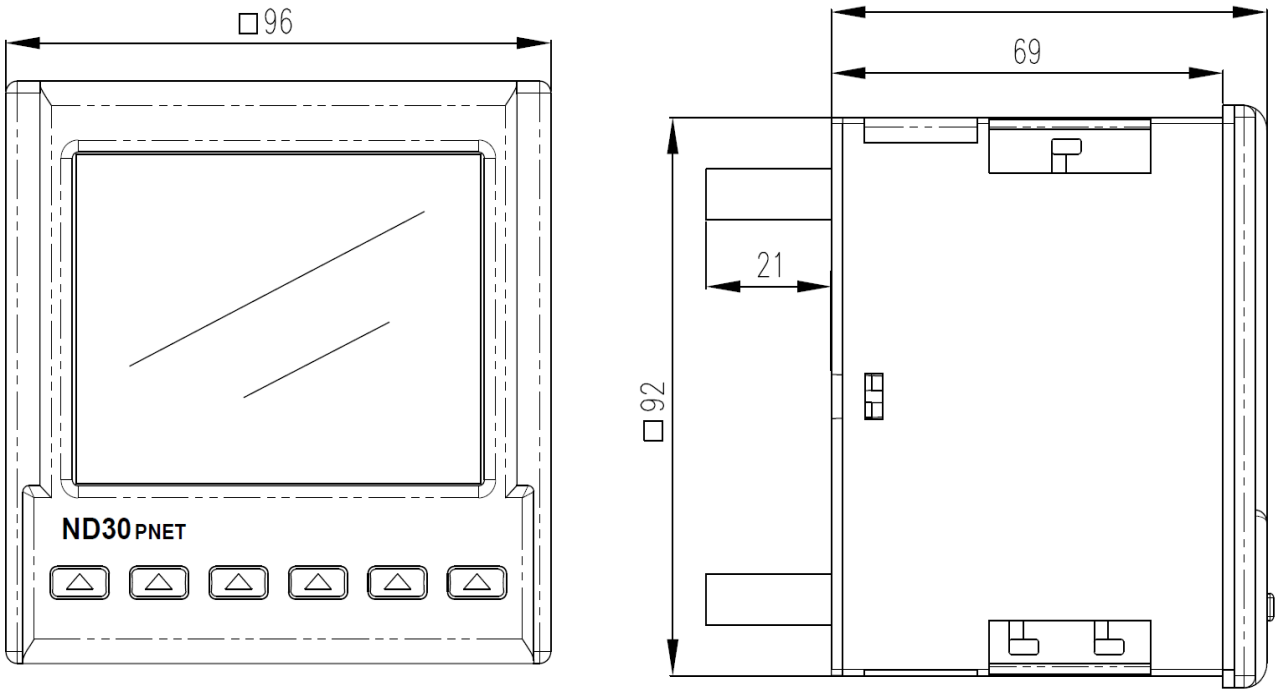

Fig.3. Overall dimensions of ND30PNET

5 DESCRIPTION OF THE INSTRUMENT

5.1 Current inputs

All current inputs are galvanically isolated (internal current transformers). The meter is adapted for use with external current transformers / 1 A or 5 A /. Displayed values of the current and the derived quantities are automatically calculated by the value of the introduced external transformer ratio.

5.2 Voltage inputs

All voltage inputs are galvanically isolated (internal voltage transformers). Quantities at voltage inputs are automatically calculated by the amount of introduced ratio of the external voltage transformer. Voltage inputs are defined in the order as 3x57.7/100 V, 3x230/400V or 3x110/190V; 3x400/690 V.

5.3 External connections diagram

External connections are shown in Figure 4 and 4a.

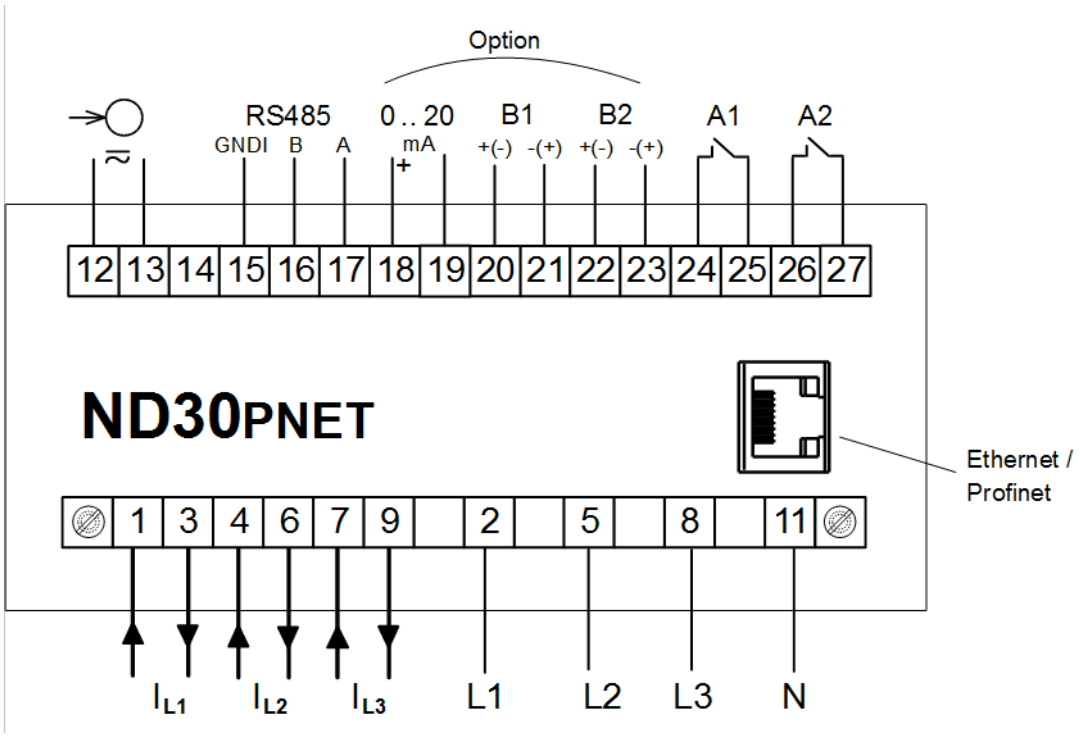

Fig.4. Connection of the meter – version with binary inputs.

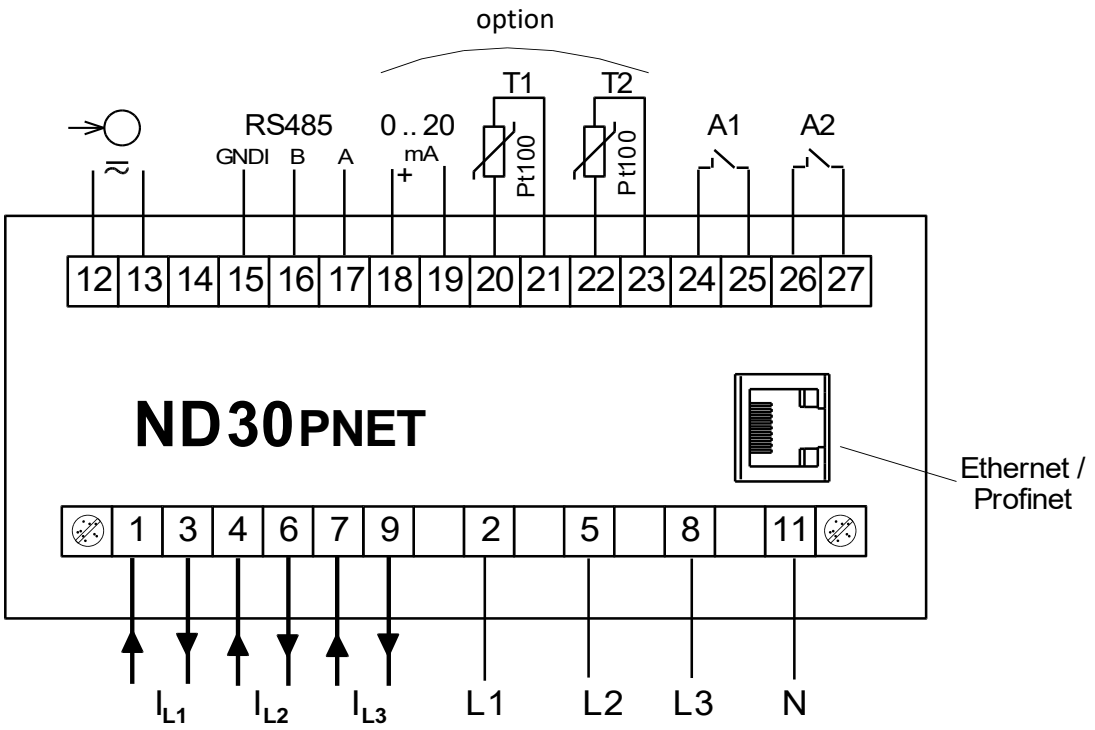

Fig.4a. Connection of the meter – version with Pt100 inputs.

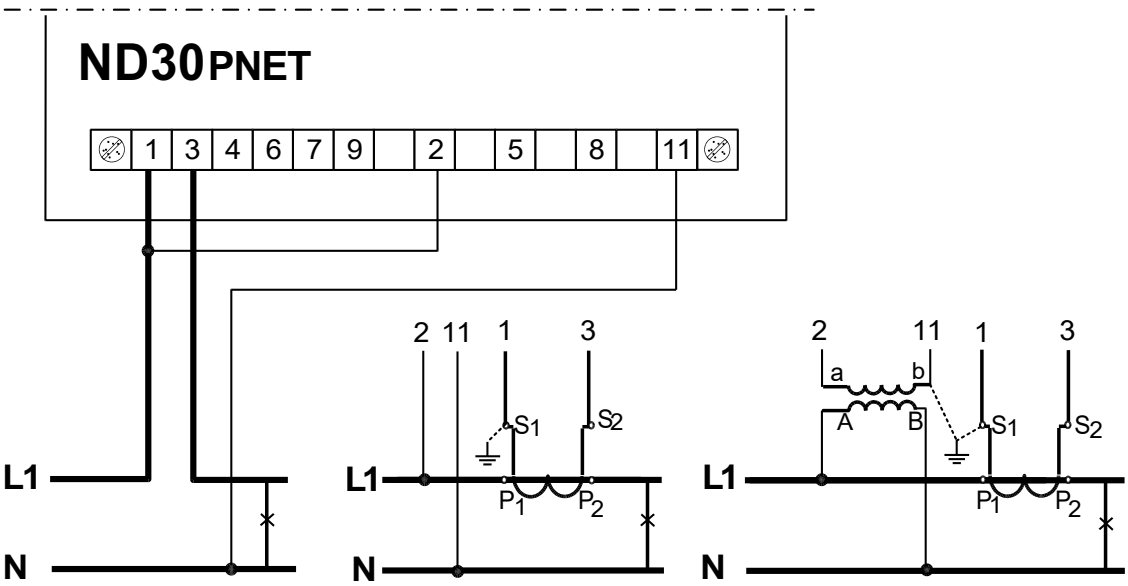

Fig.5. Direct, semi-direct and indirect measurement in 1-phase network

Direct measurement
in 4-wire network

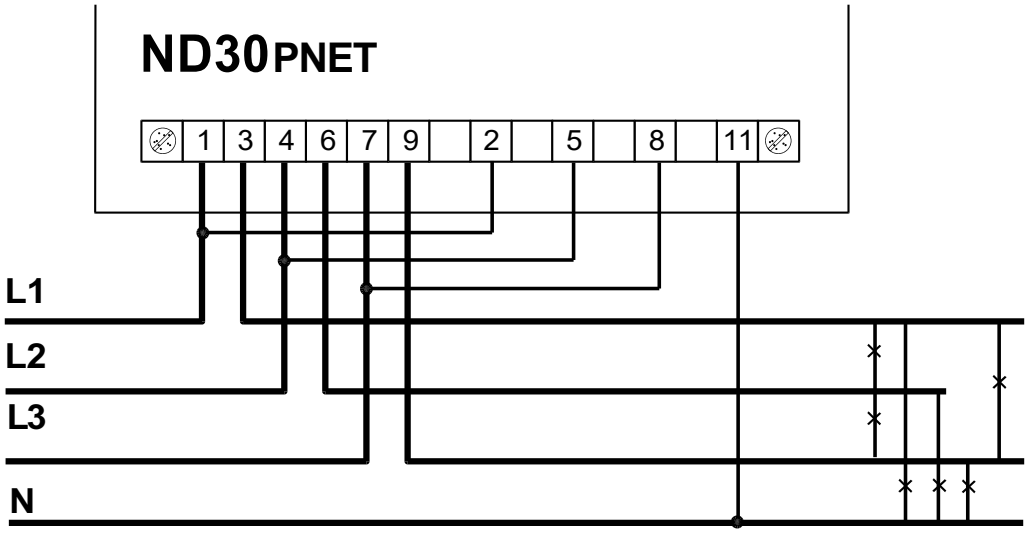

Semi-direct measurement
in 4-wire network

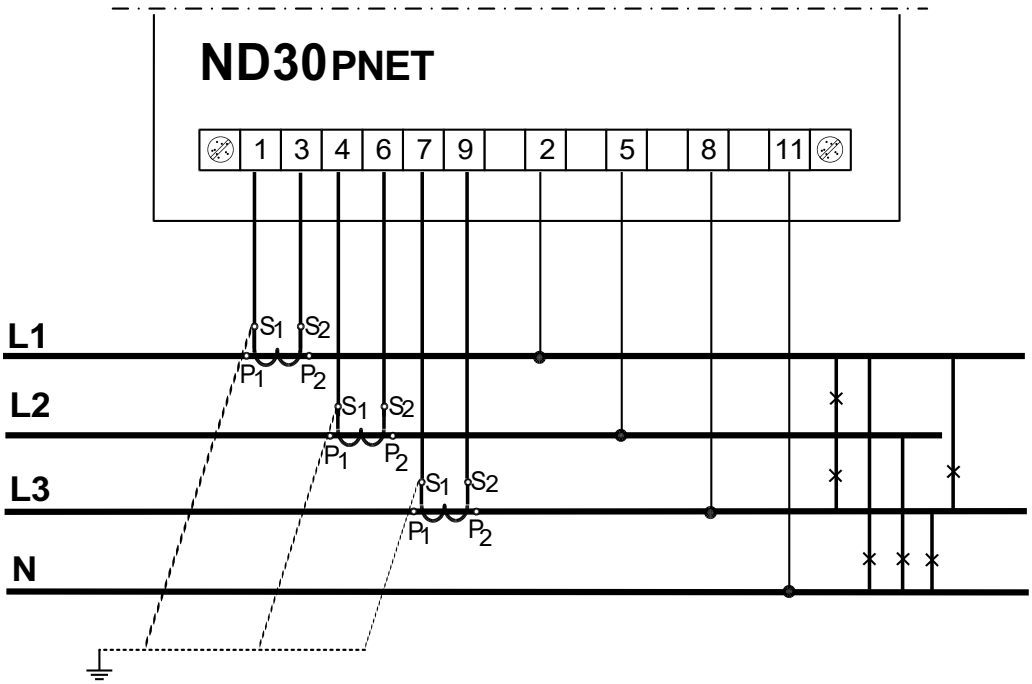

Indirect measurement
in 4-wire network

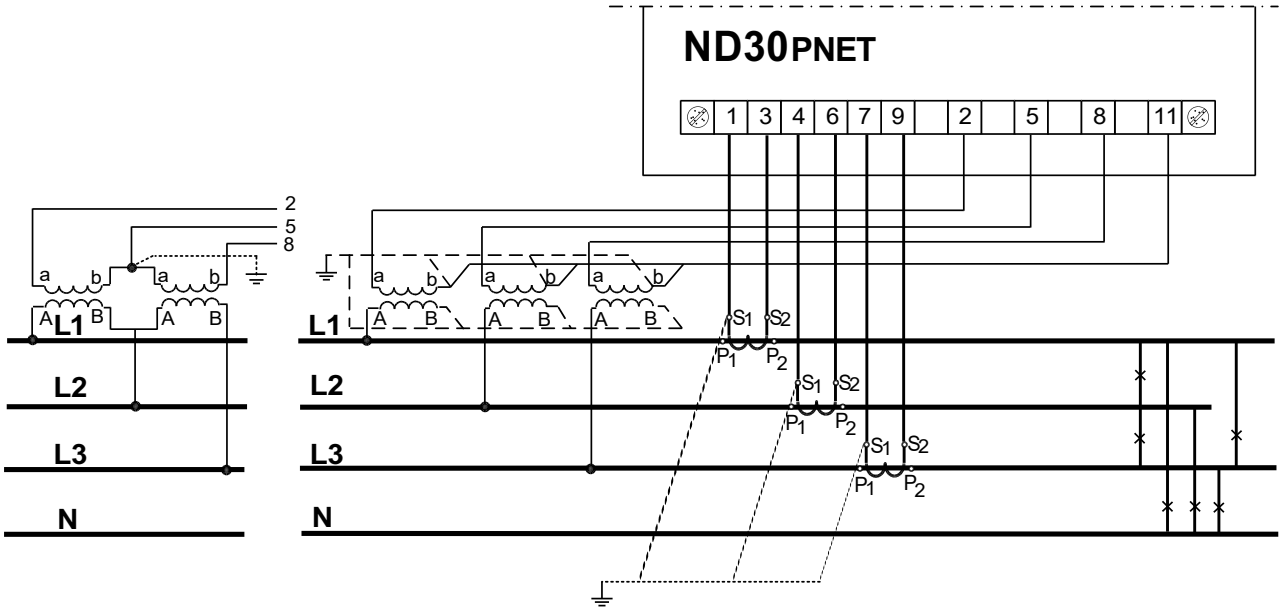

Fig.6. Connection of input signals in 3-phase 4-wire network

Direct measurement in 3-wire network

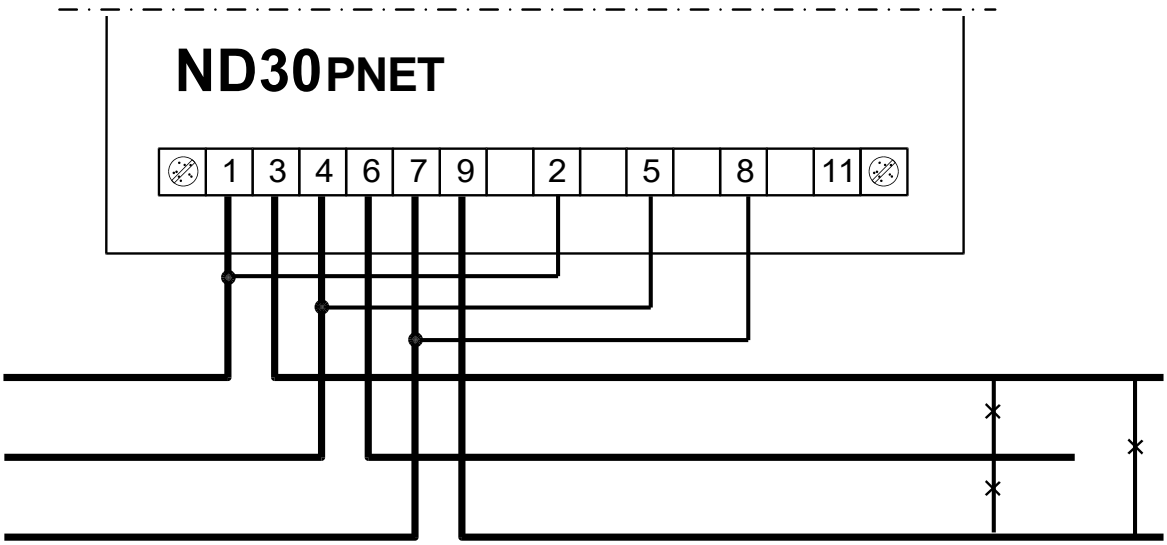

Semi-direct measurement with the use of 2 current transformers in 3-wire network

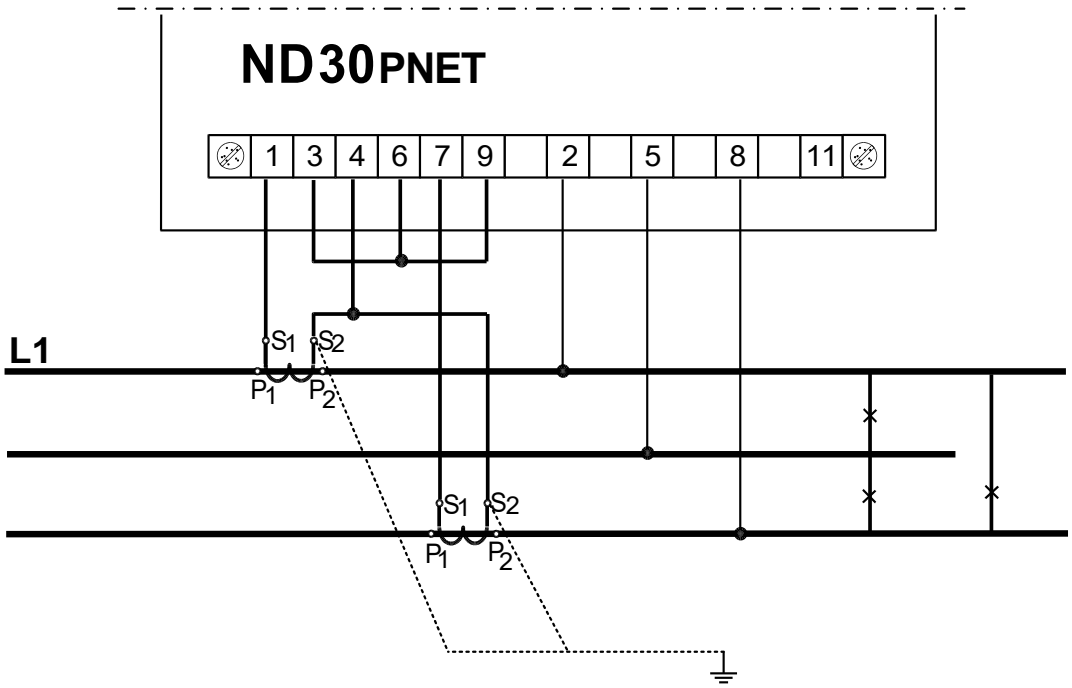

Indirect measurement with the use of 2 current transformers
and 2 or 3 voltage transformers in 3-wire network

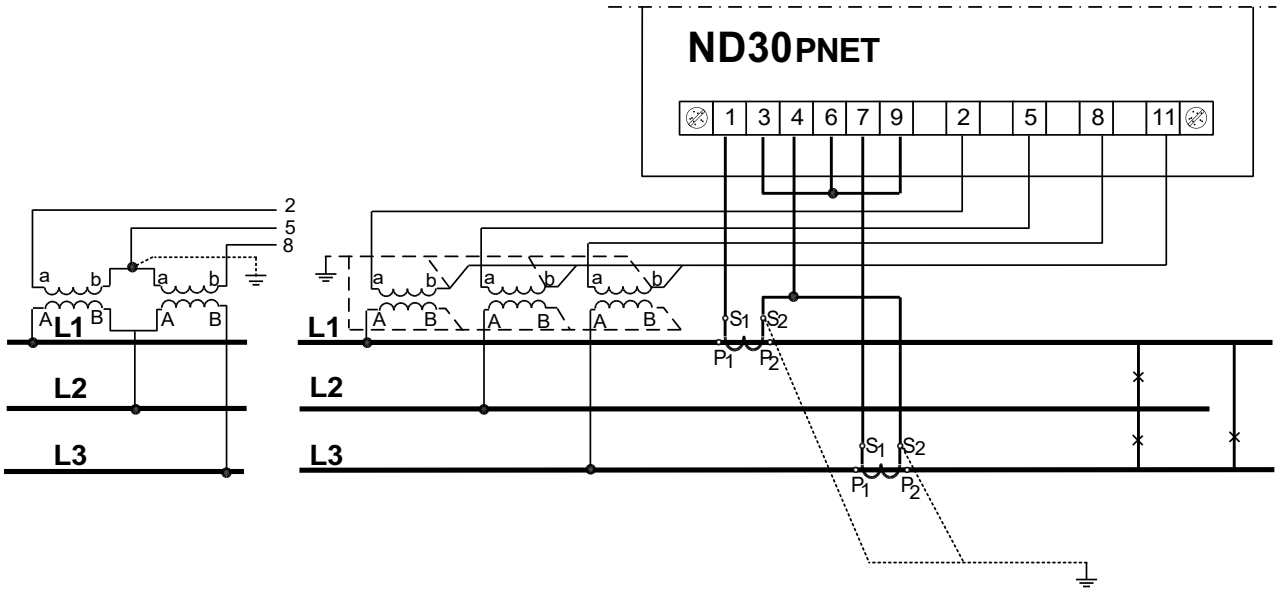

Fig.7. Connection of input signals in 3-phase 3-wire network

6 OPERATION OF THE METER

6.1 Front panel

Fig.8. Front panel

ND30PNET meter has 6 buttons and a graphical color display. Description of the front panel:

f1,...,f8	8 display fields - digits for readings and settings,	DMD	indicator of averaged quantity (Demand)
V,A,W,var, VA, Wh, varh, Hz,	units of displayed quantities	k, M	kilo = $10^{3,}$ Mega = 10^{6}
U1,I1, P1, ...EnQ	markings of displayed parameters		markers of the type of load inductive, capacitive

The values of measured parameters are presented on active pages selected by subsequent pressing of the buttons ▶ (next page) or ◀ (previous page).
Page size is determined by 8 quantities selected from Table 1 and displayed on the screen.
Defining pages has been described under **Displaying**. The buttons of the meter can perform different functions, depending on the site of application. Functions are described on the bar at the bottom of the screen. If no description is present, it means that the button is inactive at the given moment.

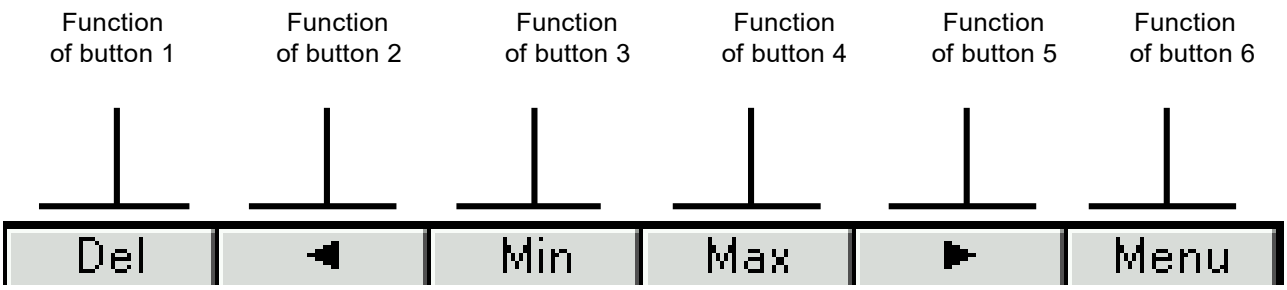

Fig.9. Sample designation of buttons

The information bar at the top of the screen shows the status of the alarm outputs, alarm conditions, T1 and T2 temperature of the sensors connected to the first and second input of PT100, state of binary inputs B1 and B2, the symbol of Ethernet / Profinet connection, indicators of receiving and transmitting data to the RS485 line, the date and real-time clock . In case of reverse phase sequence, "phase sequence error" flashes.

a) Version with Pt100 inputs

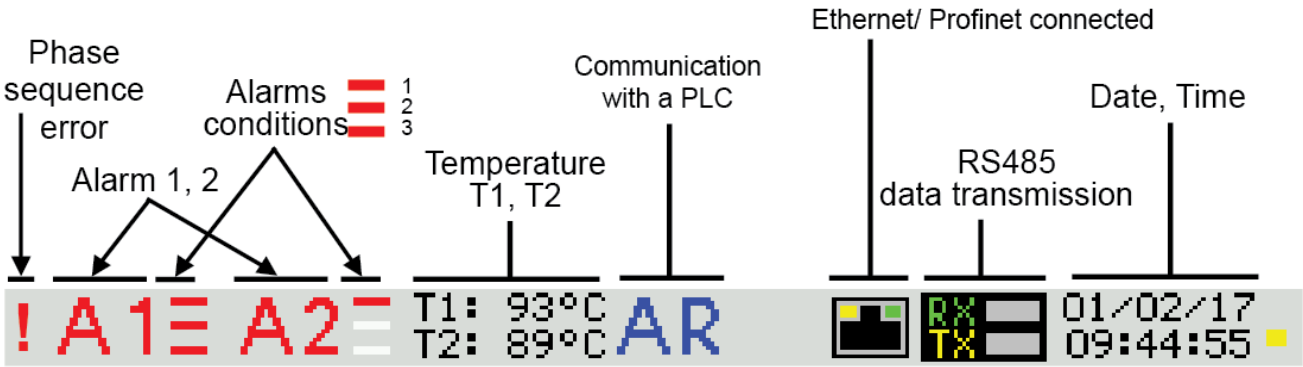

b) Version with binary inputs

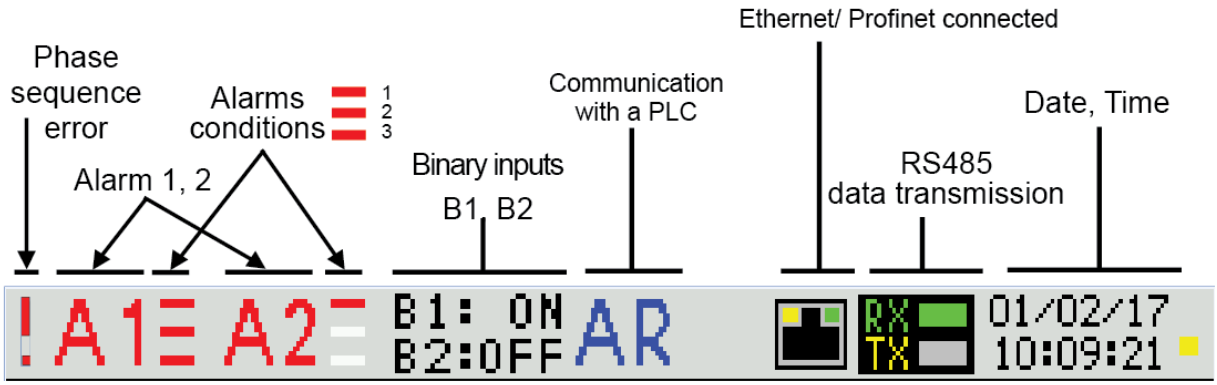

Fig.10. Information bar

6.2 Starting operation

After powering the meter displays the logo, the name of the meter ND30PNET, the ordered version, the current version of the program and the MAC, and then proceeds to the measurement mode and sets itself on the page which was set as the last one. Displayed information:

ND30PNET v:1.00– type of the meter, program

version number Bootloader v.01.05 bootloader

version number

U: 57.7/230.0 V – version for voltage

I: 1.0/5.0 A – version for current

MAC: AA:BB:CC:DD:EE:FF

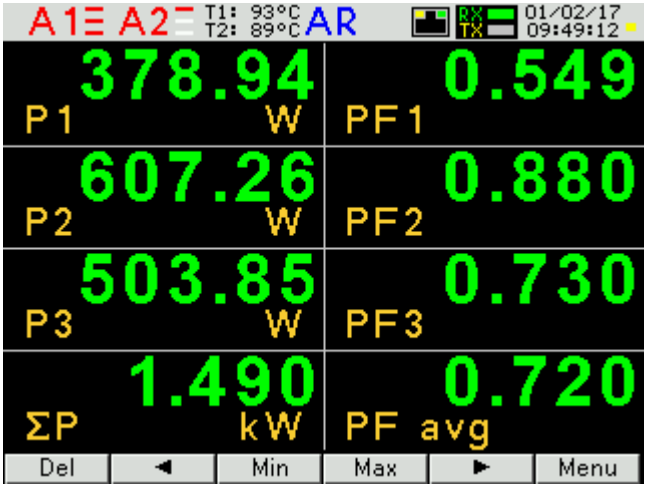

Fig.11. Screen of the measuring mode of the meter

6.3 Language selection

The preset language is English. To select a different language, press and hold the Menu button for about 10 seconds. The language selection menu will appear. The language selection is made with the ▲ or ▼ buttons and then confirmed again by pressing the OK button.

7 CONFIGURATION OF THE METER PARAMETERS

During normal operation, values of quantities are displayed according to the pre-programmed pages or configured by the user in the **Displaying** parameters group.

The meter menu is divided into groups of parameters:

Parameters – configuration of the meter parameters,

Alarms – configuration of alarms Alarm 1, Alarm 2,

Analog output – configuration of analog output,

Displaying – configuration of displayed pages,

Ethernet – configuration of Ethernet/Profinet parameters,

Modbus – configuration of RS485 parameters,

Settings – settings: password, language, time, date,

Information – preview of program version, serial no., MAC address,

To enter the parameters menu press the button **Menu** for about 3 seconds.

Using ▼ ▲ select the group and confirms with button **Select** o return to normal operation the user should press button **Exit**

Parameters	Connection wire 3 phase-4 wire 3 phase-3 wire. 1 phase-2 wire	Current input range O 1 A ⦿ 5 A	Voltage input range O 3x57.7/100 V ⦿ 3x230/400 V or O 3x110/190 V ⦿ 3x400/690 V	Voltage Transformer primary 0000100	Voltage transformer secondary 00100.0	Current Transformer primary 00005	Current transformer secondary 00005	Demand integ. time ⦿ 15 min O 30 min O 60 min	AVG synchronization ⦿ lack Owith RTC	Pt100 reist on inp 1 PT100 [Ω]0000.00
	Pt100 reist on inp 2 PT100 [Ω] 0000.00	Voltage connector 2 ⦿ U1 O U2 O U3	Voltage connector 5 O U1 ⦿ U2 O U3	Voltage connector 8 O U1 O U2 ⦿ U3	Current connector 1-3 ⦿ I1 O -I1 O I2 O -I2 O I3 O -I3	Current connector 4-6 O I1 O -I1 ⦿ I2 O -I2 O I3 O -I3	Current connector 7-9 O I1 O -I1 O I2 O -I2 ⦿ I3 O -I3	Delete energy counters ⦿ No O active O reactive O apparent O all	Delete demand values ⦿ No O Yes	Set parameters default ⦿ No O Yes
Alarms **Alarm 1** **Alarm 2**	**Settings**	Logical conditions ⦿C1 OC1 v C2 v C3 OC1 ∧ C2 ∧ C3 O(C1 ∧ C2) v C3 O(C1 v C2) ∧ C3	Relay state if alarm on O off ⦿ on	Holdback Alarm off ⦿ off O on	Display alarm event ⦿ off O on	Set default ⦿ No O Yes				
	Condition C1 **Condition C2** **Condition C3**	Value ⦿ U1 O I1 O P1 O Q1 : O gg:mm	Condition type ⦿ n_on O noFF O on O oFF O H_on : O 3_oF	Low limit condition [%] +0099.0	High limit condition [%] +0101.0	Delay to condition on [s] 0000	Delay to condition off [s] 0000	Holdback condition off->on [s] 0000	Display condition event ⦿ off O on	
Analog output	Value O U1 ⦿ I1 O P1 O Q1 : O gg:mm	Output range ⦿ 0...20mA O 4...20mA	Low limit input.[%] +000.0	High limit input [%] +100.0	Low limit output [mA] 0.00	High limit output [mA] 20.00	Out mode ⦿ normal O low limit output O high limit output	Set defaults ⦿ No O Yes		

Fig.12a. Programming matrix

Displaying	**Settings**	Backlight level ○ Minimum ○ Medium ⦿ Maximum	Time to Backlight level min [s] 0000	Pages cfg ⦿ page 1 ⦿ page 2 ⦿ page 3 : ⦿ page 12	Pages color ⦿ green ○ red ○ yellow : ○ olive	Set page defaults ⦿ No ○ Yes
	Page 1 : **Page 10**	Display field 1 Display field 2 : : Display field 8	○ Off ⦿ U1 ○ I1 ○ P1 ○ Q1 : ○ En S			

Fig.12b. Programming matrix

Ethernet/ Profinet	**Addresses**	Name *(empty)*	IP address 000.000.000.000	Subnet Mask 000.000.000.000	Gateway Address 000.000.000.000	MAC address aa.bb.cc.00:21:01	Reset ⦿ No ○ Yes

Fig.12c. Programming matrix

Modbus	Address 001	Speed ○ 4800 b/s ◉ 9600 b/s ○ 19,2 kb/s ○ 38,4 kb/s ○ 57,6 kb/s ○ 115,2 kb/s	Mode ◉ RTU8N2 ○ RTU8N1 ○ RTU8O1 ○ RTU8N1	Factory settings reg. 42xx ◉ No ○ Yes				
Settings	Password ***	Language ○ English ◉ Polish ○ Deutsch	Waiting time 13.47	Date 08/09/2015	Factory settings ◉ No ○ Yes			
Information	Type ND30PNET	Ordering code 12200	Version of loader 1.04	Version of program 0.60	MAC address aa.bb.cc.00:21:01	IP address 10.0.0.190	Subnet mask 255.0.0.0	Default gateway 10.10.10.203

Fig.12d. Programming matrix

7.1 Measurement

The **Measurement** group displays values according to pre-programmed pages or pages configured by the User in the group **Displaying**.
Changing the page is done by pressing the button ◄ or ►.
Preview of maximum or minimum values is done by pressing the **Max** button or **Min** respectively.
Deleting the maximum or minimum values is done by pressing the button **Del** while viewing their values, i.e. first you must press **Max** or **Min** and then **Del**.

When displaying the reactive power or energy, inductive or capacitive, the following markers are displayed indicating the type of load: for inductive or for capacitive load. When displaying active energy the meter displays "+" active energy import or "-" active energy export.
Exceeding the upper or lower range of indications is signaled by ∧∧∧∧ or ∨∨∨∨. When measuring averaged values (P DMD, S DMD, I DMD) single measurements are done with 0.25 second quantum. Averaging time can be chosen: 15, 30 or 60 minutes. Until all samples of the averaged values are obtained, the values are calculated from samples already measured.
The value of current in neutral lead IN is calculated from the phase currents vectors.

7.1.1 Measurement of voltage and current harmonics

Harmonics are selected by choosing the pages dedicated to display harmonic values of voltages U1, U2, U3 and currents I1, I2, I3 simultaneously for 3 phases (page 11). The number of the displayed harmonics can be changed within the scope 2..51 by using button ▼ or ▲.

Page 12 shows a bar graph of harmonics: voltages at the top, the currents in the bottom of the screes for individual phases. Page 12 shows bar charts of harmonics. Phases of the displayed harmonics are selected using button **L1,2,3** . The button is used to select the harmonics group: harm$_2$ - harm$_{26}$, harm$_{27}$ - harm$_{52}$ or harm$_2$ – harm$_{51}$.

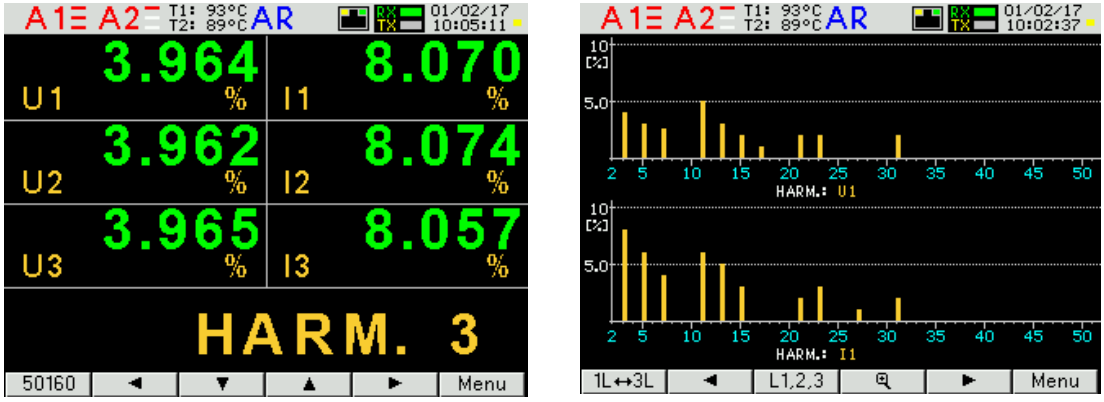

Fig.13, Screens 11 and 12 - visualization of harmonics

7.2 Parameters

In this group the parameters of the meter are set. In order to enter the Parameter group press the button **Menu** for about 3 seconds, and then with ▲ or ▼ select the Parameters and confirm with **Select** . Access to configuration of parameters is protected by a password, if it has been introduced and is different from zero. When the password is 0000, the password prompt is bypassed. If the password is incorrect, the following message is displayed: "Invalid password. Read-only menu." Then the user can view the parameters, but introducing changes is blocked.

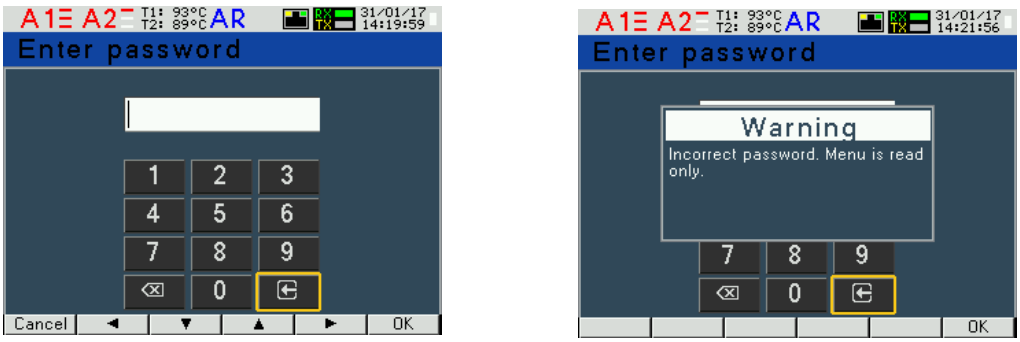

Fig.14, Screens for entering a password

When the password is correct or no password has been entered, we can set the values acc. to Table 2. Using ▲ ▼ we select a parameter and confirm using the button **Select** . Then using ▲ ▼ we choose the parameter feature or set the desired values of the parameter, i.e. the position of decimal digit can be selected with or, value of the digit with ◄ or ►. The active position is indicated by the cursor. The set feature or value of a parameter must be confirmed with **OK** or canceled by pressing the button **Cancel** .

In order to exit the Parameter procedure the user must press the button **Esc** or, after waiting for

about 120 seconds. The exit from the Menu of parameter selection after **Exit** or after waiting for about 120 seconds.

Fig.15. Screens of Parameter group

Table 1

No.	Parameter name	Characteristic / value	Description	Default value
1	Connection wire	3 phase- -4 wire 3 phase- -3 wire 1 phase- -2 wire	Network type 3 phase 4 wire 3 phase 3 wire 1 phase 2 wire	3phase, 4wire
2	Current input range	1A, 5A	Input range:1A or 5A	5A
3	Voltage input range	3x57.7/100 V; 3x230/400 V; Or 3x110/190V; 3x400/690 V;	Ranges depending on version code	3x230/400 V or 3x400/690 V

4	Voltage transformer primary	1 .. 1245183 V		100
5	Voltage transformer secondary	0.1 .. 01000.0		100.0
6	Current transformer primary	1…20000		5
7	Current transformer secondary	1...1000		5
8	Damend integ. time	15 min, 30 min, 60 min	Averaging time of active power P DMD, apparent power S DMD, current I DMD	15 min
9	AVG synchronization	none, with RTC	Averaging synchronized with real time clock	none
10	PT100 resist on inp 1	0000.00	Resistance value in Ω	0.00 Ω
11	PT100 resist on inp 2	0000.00	Resistance value in Ω	0.00 Ω
12	Voltage connector 2	U1, U2, U3		U1
13	Voltage connector 5	U1, U2, U3		U2
14	Voltage connector 8	U1, U2, U3		U3
15	Current connector 1-3	I1,-I1,I2,-I2,I3,-I3		I1
16	Current connector 4-6	I1,-I1,I2,-I2,I3,-I3		I2
17	Current connector 7-9	I1,-I1,I2,-I2,I3,-I3		I3
18	Delete energy counters	No, active, reactive, apparent, all		No
19	Delete demand values	No, Yes		No
20	Default parameters	No, Yes		No

During parameter changes, it is checked if the value is within the range. If the value has been set out of range, the value is set to the maximum value (the value is too high) or the minimum (the value is too little).

In order to configure ND30PNET meter the user can also use free eCon software available at manufacturer's website.

7.3 Alarms

We choose **Alarms** group in the options and confirm with button **Select** .

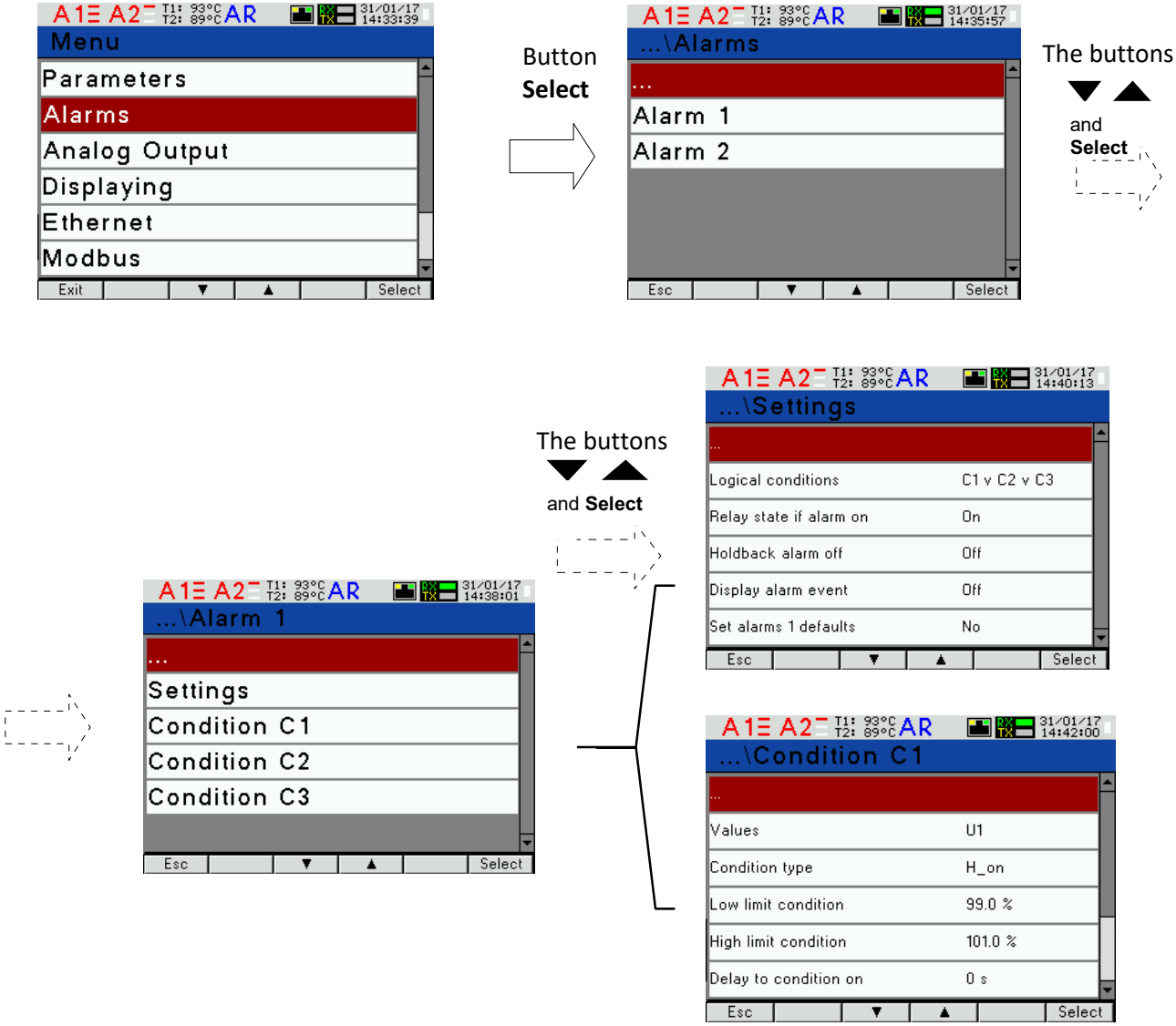

Fig.16. Screens of Alarms group

Table 2

No				Parameter name	Range	Notes/Description	Default value
1	Settings			Logical condition	C1 C1 v C2 v C3 C1 ∧ C2 ∧ C3 (C1 ∧ C2) v C3 (C1 v C2) ∧ C3		C1
2	Settings			Relay state if alarm on	Off/On	State of relay with activated alarm Deactivated/Activated	On
3	Settings			Holdback alarm off	Off/On		Off
4	Settings			Display alarm event	Off/On	When the function of alarm signaling is switched on, after the state of emergency the alarm symbol is not blanked, but it begins to flash. Signaling is active till it is switched off by pressing the buttons **Del** and **Alarm** (> 1 sec.). The function only applies to the alarm signaling, thus relay contacts will act without maintaining, according to the selected type of alarm.	Off
5	Condition 1	Condition 2	Condition 3	Values	U1,I1,...,T2/B2 ,gg:mm	Value at the alarm output parameter acc. to table 8	U1
6	Condition 1	Condition 2	Condition 3	Condition type	n_on, noFF, on,oFF, H_on, HoFF, 3non, 3noF, 3_on, 3_oF	Acc. to fig. 17	n-on
7	Condition 1	Condition 2	Condition 3	Low limit condition	-144.0…144.0	in % of the nominal value of input quantity	90.0
8	Condition 1	Condition 2	Condition 3	High limit condition	-144.0…144.0	in % of the nominal value of input quantity	110.0
9	Condition 1	Condition 2	Condition 3	High limit condition	0 … 3600	in seconds	0
10	Condition 1	Condition 2	Condition 3	Delay to condition off	0 … 3600	in seconds	0
11	Condition 1	Condition 2	Condition 3	Holdback condition off->on	0 … 3600	in seconds	0

12				Display condition event	Off/On	When the function of maintaining is switched on, after the state of condition is finished, the condition symbol is not blanked, but it begins to flash. Signaling is active till it is switched off by pressing the buttons **Cancel** and **Alarm** (> 3 sec.).	Off

When the entered ”Upper value of condition” is lower than the ”Lower value of condition”, the condition is disabled.

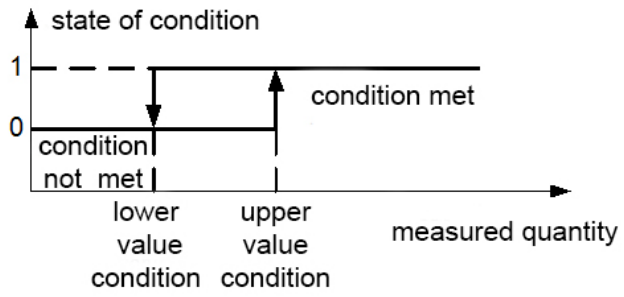

a) **n_on**

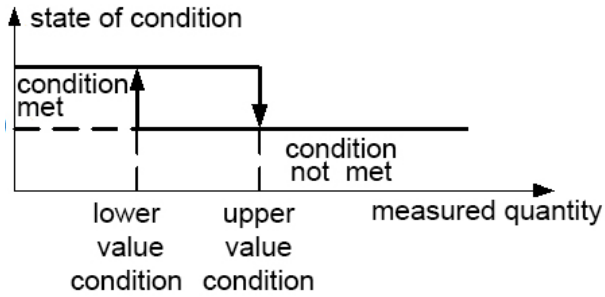

b) **noFF**

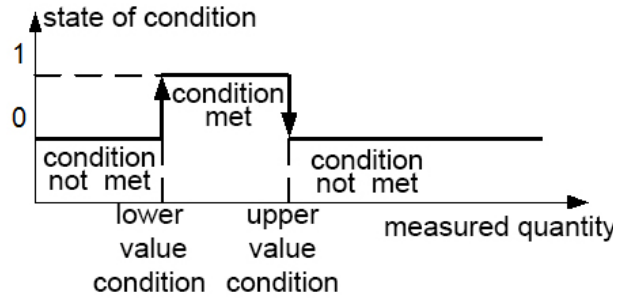

c) **on**

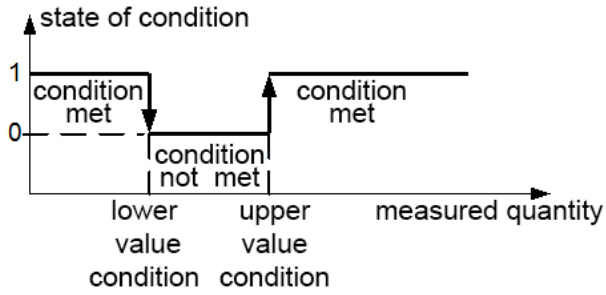

d) **oFF**

Fig.17, Types of conditions: a) n_on b) noFF c) on d) OFF

Other types of conditions:

- **H_on** – always met;
- **HoFF** – always not met,
- **3non** – when the value of the measured quantity exceeds the "Upper value of
- condition” at any phase - the condition will be met. The condition is disabled when the value of the measured value at all phases is less than the "Lower the value of the condition."

- **3noF** – when the value of the measured quantity at any phase is lower than the "Lower value of condition" - the condition is met. The condition is disabled when the value of the measured quantity at all phases is higher than the "Upper value of condition."
- **3_on** – when the value of the measured quantity at any phase will be between "The lower value of condition," and "Upper value of condition" - the condition is met. The condition will be disabled if the value of the measured quantity is below the "Lower value of condition" or above the "Upper value of the condition" at all phases.
- **3_oF** – when the value of the measured quantity will be below the "Lower value of condition" or above the "Upper value of condition" at any phase - the condition is met. The condition will be disabled if the value of the measured quantity is between the "Lower value of condition" and the "Upper value of the condition" at all phases.
- In the 3rd series of alarms the alarm value must come from the following ranges: 01-09, 10-18 i 19-27 (acc. to table 8). They work with the same Hysteresis thresholds of the "Lower values of condition" and "Upper value of condition" for each phase. Alarms signaling maintaining is switched off after pressing **Del** and **Alarm** (> 3 sec.).

7.4 Analog output

Select **Analog output** in the options and confirm by pressing the button **Select**

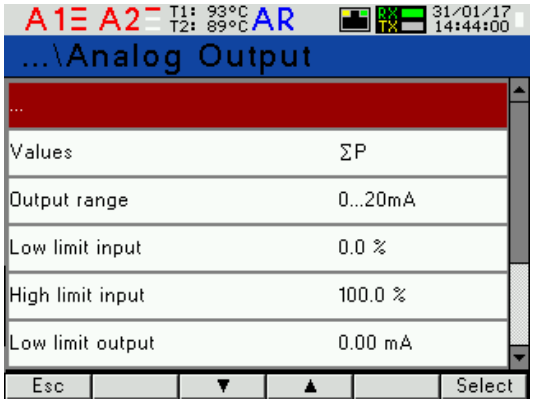

Fig.18. Screen of Analog output group

Table 3

No.	Parameter name	Characteristic / value	Description	Default value
1	Value	U1,I1,...,T2/B2,hh:mm	Value at the analog output, parameter acc. to table 8	ΣP
2	Output range	0...20mA,4...20mA,	Range of analog output	0...20mA
3	Low limit input	-144.0 .. 144.0%	Lower value of the input range in % of the nominal range	0.0
4	High limit input	-144.0 .. 144.0%	Upper value of the input range in % of the nominal range	100.0
5	Low limit output	00.00 .. 24.00	Lower value of the output range of the output in mA	0.00
6	High limit output	0.01 .. 24.00	Upper value of the output range of the output in mA	20.00
7	Out mode	Normal Low limit output High limit output	Constant output operating mode.	Normal

7.5 Displaying

In this group we configure the pages displayed during normal operation of the meter.

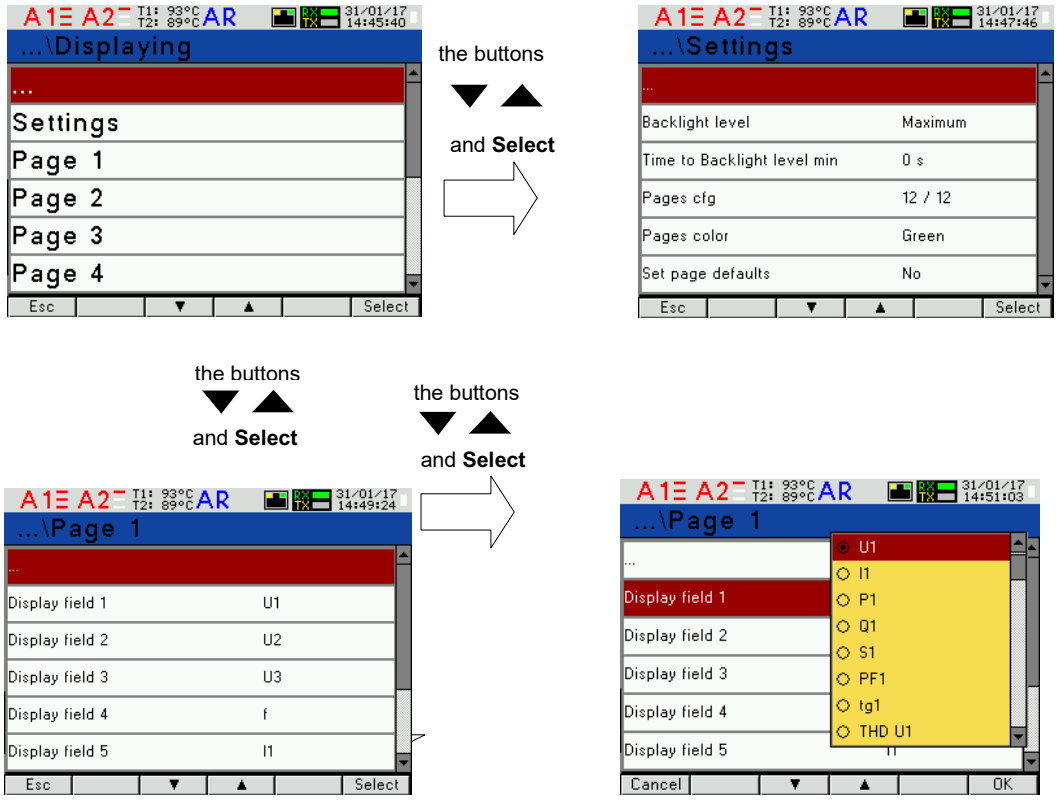

Fig.19. Screens of Displaying group

Table 4

No.		Parameter name	Range	Notes / description	Default value
1	Settings	Backlight level	Minimum, Medium, Maximum		Maximum
		Time to Backlight level min	0 .. 9999	in seconds	0
		Pages cfg	Page 1 Page 2 : Page 11 Page 12	Selection of pages visualized in Measurement mode	Page 1 Page 2 : Page 11 Page 12
2		Pages color	Green Red Yellow : Olive	Color of values displayed in Measurement mode	Green
3		Set page defaults	No Yes		No
4	Page 1 : : Page 10	Display field 1 : : Display field 8	Off U1 I1 P1 Q1 : En S	Selection of quantities displayed on a chosen page and field in accordance with table 5.	Table 6a or 6b or 6c depending on connections layout

Selection of displayed quantities Table 5

No.	value name	designation	unit	Signaling	3Ph / 4W	3Ph / 3W	1Ph / 2W
00	no value - blanked display field	Off			√	√	√
01	L1 phase voltage	U1	(M,k)V		√	x	√
02	L1 phase wire current	I1	(k)A		√	√	√
03	L1 phase active power	P1	(G,M,k)W		√	x	√
04	L1 phase reactive power	Q1	(G,M,k)var	/	√	x	√
05	L1 phase apparent power	S1	(G,M,k)VA		√	x	√
06	L1 phase active power factor (PF1=P1/S1)	PF1			√	x	√
07	tgφ factor of L1 phase (tg1=Q1/P1)	tg1			√	x	√
08	L1 phase voltage THD*	THD U1	%		√	√	√
09	L1 phase current THD	THD I1	%		√	√	√
10	L2 phase voltage	U2	(M,k)V		√	x	x
11	L2 phase wire current	I2	(k)A		√	√	x
12	L2 phase active power	P2	(G,M,k)W		√	x	x
13	L2 phase reactive power	Q2	(G,M,k)var	/	√	x	x
14	L2 phase apparent power	S2	(G,M,k)VA		√	x	x
15	factor of active power of L2 phase (PF2=P2/S2)	PF2	PF		√	x	x
16	tg factorφof L2 phase (tg2=Q2/P2)	tg2			√	x	x
17	THD of L2* phase voltage	THD U2	%		√	√	x
18	THD of L2 phase current	THD I2	%		√	√	x
19	voltage of L3 phase	U3	(M,k)V		√	x	x
20	current in outer conductor L3	I3	(k)A		√	√	x
21	active power of L3 phase	P3	(G,M,k)W		√	x	x
22	reactive power of L3 phase	Q3	(G,M,k)var	/	√	x	x
23	apparent power of L3 phase	S3	(G,M,k)VA		√	x	x
24	factor of active power of L3 phase (PF3=P3/S3)	PF3			√	x	x
25	tg factorφof L3 phase (tg3=Q3/P3)	tg3			√	x	x
26	THD of L3* phase voltage	THD U3	V%		√	√	x
27	THD of L3 phase current	THD I3	A%		√	√	x

28	average phase voltage	U avg	(M,k)V		√	x	x
29	average three-phase current	I avg	(k)A		√	√	x
30	three-phase active power	ΣP	(G,M,k)W	+/-	√	√	√
31	three-phase reactive power	ΣQ	(G,M,k)var		√	√	√
32	three-phase apparent power	ΣS	(G,M,k)VA		√	√	√
33	3-phase active power factor (PF=P/S)	PF avg			√	√	x
34	tg factor φ 3-phase average (tg=Q/P)	tg avg			√	√	x
35	THDU 3-phase average*	THD U	%		√	√	x
36	THDI 3-phase average	THD I	%		√	√	x
37	frequency	f	Hz		√	√	√
38	phase-to-phase voltage L1-L2	U12	(M,k)V		√	√	x
39	phase-to-phase voltage L2-L3	U23	(M,k)V		√	√	x
40	phase-to-phase voltage L3-L1	U31	(M,k)V		√	√	x
41	phase-to-phase average voltage	U123	(M,k)V		√	√	x
42	averaged active power (P Demand)	P DMD	(G,M,k)W		√	√	√
43	averaged apparent power (S Demand)	S DMD	(G,M,k)VA		√	√	√
44	averaged current (I Demand)	I DMD	(k)A		√	√	√
45	current in neutral wire	I(N)	(k)A		√	x	x
46	Temperature T1 of input 1/ State of binary input B1	T1/ B1	°C/		√	√	√
47	Temperature T2 of input 2/ State of binary input B2	T2/ B2	°C/		√	√	√
48	3-phase imported active energy	En P+	kWh		√	√	√
49	3-phase exported active energy	En P-	kWh		√	√	√
50	3-phase reactive inductive energy	En Q	kvarh		√	√	√
51	3-phase reactive capacitive energy	En Q	kvarh		√	√	√
52	3-phase apparent energy	En S	kVAh		√	√	√

* In 3-phase 3-wire system (3Ph/3W) respectively THD U12, THD U23, THD U31, THD U123

Default settings of the displayed pages in 3-phase 4-wire system Table 6a

P1		P2		P3		P4		P5	
U1 V	I1 A	U12 V	ΣP W	P1 W	PF1	P1 W	Q1 var	THD U1	THD I1 %
U2 V	I2 A	U23 V	ΣQ var	P2 W	PF2	P2 W	Q2 var	THD U2	THD I2 %
U3 V	I3 A	U31 V	ΣS VA	P3 W	PF3	P3 W	Q3 var	THD U3	THD I3 %
f Hz	I avg A	U123 V	PF avg	ΣP W	PF avg	ΣP W	ΣQ var	THD U %	THD I %
P6		**P7**		**P8**		**P9**		**P10**	
U1 V	S1 VA	U2 V	S2 VA	U3 V	S3 VA	ΣP W	P DMD W	ΣP W	+En P kWh
I1 A	PF1	I2 A	PF2	I3 A	PF3	ΣQ var	S DMD W	ΣQ var	-En P kWh
P1 W	tg1	P2 W	tg2	P3 W	tg3	I avg A	I DMD A	ΣS VA	En Q kvarh
Q1 var	f Hz	Q2 var	f Hz	Q3 var	f Hz	I(N) A	f Hz	En S kVAh	En Q kvarh

P11		P12
U1 %	I1 %	HARM.:U1U2U3 % bar graph
U2 %	I2 %	
U3 %	I3 %	HARM.:I1I2I3 % bar graph
HARM.2..51		

Pages 11 and 12 cannot be configured

Default settings of the displayed pages in 3-phase 3-wire system

Table 6b

P1		P2		P3		P4		P5	
U12 V	I1 A	U12 V	ΣP W	ΣP W	P DMD W	THD U12 %	THD I1 %	ΣP W	En P+ kWh
U23 V	I2 A	U23 V	ΣQ var	ΣQ var	S DMD W	THD U23 %	THD I2 %	ΣQ var	En P- kWh
U31 V	I3 A	U31 V	ΣS VA	I avg A	I DMD A	THD U31 %	THD I3 %	ΣS VA	En Q kvarh
f Hz	I avg A	U123 V	PF avg	tg avg	PF avg	THD U123 %	THD I %	En S kVAh	En Q kvarh

Default settings of the displayed pages in single-phase system Table 6c

P1		P2		P3	
U1 V	S1 VA	P1 W	P DMD W	P1 W	En P+ kWh
I1 A	PF1	S1 VA	S DMD W	Q1 var	En P- kWh
P1 W	tg1	I1 A	I DMD A	S1 VA	En Q kvarh
Q1 var	f Hz	PF1	f Hz	En S kVAh	En Q kvarh

Selection of values at alarm and analog outputs Table 8

Value in the registers	Displayed parameter	Type of quantity	Value for percentage calculations corresponding to 100 % of the nominal range.
01	U1	voltage of L1 phase	Un [V] *
02	I1	current in outer conductor L1	In [A] *
03	P1	active power of L1 phase	Un x In x cos(0°) [W] *
04	Q1	reactive power of L1 phase	Un x In x sin(90°) [Var] *
05	S1	apparent power of L1 phase	Un x In [VA] *
06	PF1	power factor PF of L1 phase	1
07	tg1	tg factor φ of L1 phase	1
08	THD U1	THD of L1 phase voltage**	100.00 [%]
09	THD I1	THD of L1 phase current	100.00 [%]
10	U2	voltage of L2 phase	Un [V] *
11	I2	current in outer conductor L2	In [A] *
12	P2	active power of L2 phase	Un x In x cos(0°) [W] *
13	Q2	reactive power of L2 phase	Un x In x sin(90°) [Var] *
14	S2	apparent power of L2 phase	Un x In [VA] *
15	PF2	power factor PF of L2 phase	1
16	tg2	tg factor φ of L2 phase	1
17	THD U2	THD of L2 phase voltage**	100.00 [%]
18	THD I2	THD of L2 phase current	100.00 [%]
19	U3	voltage of L3 phase	Un [V] *
20	I3	current in outer conductor L3	In [A] *
21	P3	active power of L3 phase	Un x In x cos(0°) [W] *
22	Q3	reactive power of L3 phase	Un x In x sin(90°) [Var] *
23	S3	apparent power of L3 phase	Un x In [VA] *
24	PF3	power factor PF of L3 phase	1
25	tg3	tg factor φ of L3 phase	1
26	THD U3	THD of L3 phase voltage**	100.00 [%]
27	THD I3	THD of L3 phase current	100.00 [%]
28	U avg	average phase voltage	0.00 [%]
29	I avg	average three-phase current	In [A] *
30	ΣP	3-phase active power (P1+P2+P3)	3 x Un x In x cos(0°) [W] *
31	ΣQ	3-phase reactive power (Q1+Q2+Q3)	3 x Un x In x sin(90°) [Var] *
32	ΣS	3-phase apparent power (S1+S2+S3)	3x Un x In [VA] *
33	PF avg	3-phase power factor PF	1
34	tg avg	tg factorφ 3-phase	1
35	THD U	THD of voltage 3-phase**	100.00 [%]
36	THD I	THD of current 3-phase	100.00 [%]
37	f	frequency	100 [Hz]
38	U12	phase-to-phase voltage L1-L2	√3 Un [V] *
39	U23	phase-to-phase voltage L2-L3	√3 Un [V] *
40	U31	phase-to-phase voltage L3-L1	√3 Un [V] *
41	U123	phase-to-phase average voltage	√3 Un [V] *

42	P DMD	averaged active power (P Demand)*	3 x Un x In x cos(0°) [W] *
43	S DMD	averaged apparent power (S Demand)*	3 x Un x In [VA] *
44	I DMD	averaged current (I Demand)*	In [A] *
45	I(N)	current in neutral wire	In [A] *
46	T1	Temperature T1 of input 1/ State of binary input B1	400 [°C]
47	T2	Temperature T2 of input 2/ State of binary input B2	400 [°C]
48	En P+	3-phase imported active energy	100000 [kWh]
49	En P-	3-phase exported active energy	100000 [kWh]
50	En Q	3-phase reactive inductive energy	100000 [kvarh]
51	En Q	3-phase reactive capacitive energy	100000 [kvarh]
52	En S	3-phase apparent energy	100000 [kVAh]
53	Sequence of phases	Sequence of phases	L1,L2,L3 - 0.00 [%] L1,L3,L2 - 100.00 [%]
54	hh:mm	time, ggx100+mm	2400 - 100 [%]

*Un,In - nominal values of nominal voltages and currents

** In 3-phase 3-wire system (3Ph/3W) respectively THD U12, THD U23, THD U31, THD U123

7.6 Ethernet / Profinet

We choose **Profinet** group in the options and confirm with **Select** .

Fig.20. Screens of Ethernet / Profinet group

Table 9

No.		Parameter name	range	Notes / description (example)	Default value
1	Addresses	Name	*240 characters*	nd30pnet-xxxx	-
2		IP Address	0.0.0.0..255.255.255.255	10.0.1.190	-
3		Subnet mask	0.0.0.0..255.255.255.255	255.0.0.0	-
4		Default gateway	0.0.0.0..255.255.255.255	10.10.10.203	-
5		MAC Address		Aa:bb:cc:00:21:01	
6		Reset	No/Yes		No

7.7 Modbus

We choose **Modbus** group in the options and confirm with **Select** .

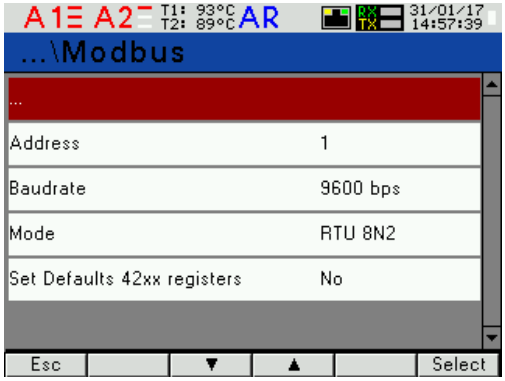

Fig.21. Screens of Modbus group

Table 10

No.	Parameter name	Characteristic / value	Description	Default value
1	Address	1…247	Address on the Modbus network.	1
2	Baud rate	4800 b/s, 9600 b/s, 19,2 kb/s, 38,4 kb/s, 57,7 kb/s, 115,2 kb/s	Baud rate	9600 b/s
3	Mode	RTU 8N2, RTU 8N1, RTU 8O1, RTU 8N1	Transmission mode	RTU 8N2
4	Default settings of registers 42xx	No, Yes	Programmable read-only register group	No

7.8 Settings

We choose **Settings** group in the options and confirm with the button **Select** .

Fig.22. Screens of Settings group

Table 11

No.	Parameter name	Characteristic / value	Description	Default value
1	Password	0 ... 9999	0 - off	0
2	Language	English, Polish, Deutsch		English
3	Time	hh:mm	hour:minute	00:00:00
4	Date	dd/mm/yyyy	Day/month/year	1.01.2015
5	Set defaults	No, Yes		No

7.9 Information

We choose **Information** group in the options and confirm with the button **Select** .

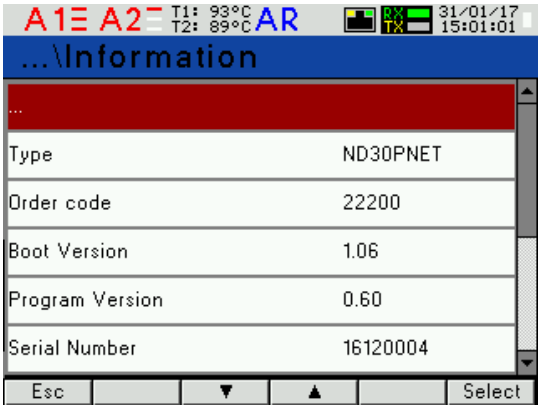

Fig.23. Screens of Information group

Table 12

No.	Parameter name	Characteristic / value	Description	Default value
1	Type		Type of meter	ND30PNET
2	Order code		First 5 digits of ordering code	e.g.12200
3	Boot version		Loader version	e.g.1.04
4	Program version		Version of the main meter program	e.g.0.60
5	Serial number	ddmmxxxx	Current serial number of the meter day month current number	np.15070006
6	MAC address	xx:xx:xx:xx:xx:xx	48-bit hardware address of the Ethernet interface written in hexadecimal	e.g.64:0E:0D:0C:0B:0A
7	IP Address	0.0.0.0..255.255.255.255	10.0.1.161	-
8	Subnet mask	0.0.0.0..255.255.255.255	255.0.0.1	-
9	Gateway	0.0.0.0..255.255.255.255	0.0.0.0	-

8 SERIAL INTERFACES

8.1 RS485 INTERFACE – the list of parameters

The implemented protocol is in accordance with the PI-MBUS-300 Rev G standard of Modicon Company. The list of serial link parameters of ND30PNET meter:

- ID 0xE0,
- meter address 1..247,
- baud rate 4.8, 9.6, 19.2, 38.4, 57.6, 115.2 kbit/s,
- operation mode Modbus RTU,
- information unit 8N2, 8E1, 8O1, 8N1,
- maximum time to commence the response 600 ms,
- maximum number of read registers in one query
  - 61 registers – 4 byte,
  - 122 registers – 2 byte,
- implemented functions
  - 03, 04, 06, 16, 17,
  - 03, 04 registers reading,
  - 06 saving one register,
  - 16 saving n - registers,
  - 17 identification of the device,

Default settings: address 1, baud rate 9.6 kbit/s, mode RTU 8N2.

8.2 Examples of registers reading and saving

Readout of n-registers (code 03h)

Example 1 . Readout of 2 registers 16-bytes of integer type, starting with the register addressed 0FA0h (4000) - registers values 10, 100.

Request:

Address of the device	Function	Address of the register		Number of registers		Checksum CRC
		B1	B0	B1	B0	
01	03	0F	A0	00	02	C7 3D

Response:

Address of the device	Function	Number of bytes	Value from register 0FA0 (4000)		Value from register 0FA1 (4001)		Checksum CRC
			B1	B0	B1	B0	
01	03	04	00	0A	00	64	E4 6F

Example 2 . Readout of 2 registers 32-byte of float type as a combination of 2 registers 16-byte starting with the register addressed 1B58h (7000) - registers values 10, 100.

Request:

Address of the device	Function	Address of the register		Number of registers		Checksum CRC
		B1	B0	B1	B0	
01	03	1B	58	00	04	C3 3E

Response:

Address of the device	Function	Number of bytes	Value from register 1B58 (7000)		Value from register 1B59 (7001)		Value from register 1B5A (7002)		Value from register 1B5B (7003)		Checksum CRC
			B3	B2	B1	B0	B3	B2	B1	B0	
01	03	08	41	20	00	00	42	C8	00	00	E4 6F

Example 3 . Readout of 2 registers 32-byte of float type as a combination of 2 registers 16-byte starting with the register addressed 1770h (6000) - registers values 10, 100.

Request:

Address of the device	Function	Address of the register		Number of registers		Checksum CRC
		B1	B0	B1	B0	
01	03	17	70	00	04	4066

Response:

Address of the device	Function	Number of bytes	Value from register 1770h(6000)		Value from register 1770h(6000)		Value from register 1772h(6002)		Value from register 1772h(6002)		Checksum CRC
			B1	B0	B3	B2	B1	B0	B3	B2	
01	03	08	00	00	41	20	00	00	42	C8	E4 6F

Example 4 . Readout of 2 registers 32-byte float type, starting with the register addressed 1D4Ch (7500)

- registers values 10, 100.

Request:

Address of the device	Function	Address of the register		Number of registers		Checksum CRC
		B1	B0	B1	B0	
01	03	1D	4C	00	02	03 B0

Response:

Address of the device	Function	Number of bytes	Value from register 1D4C (7500)				Value from register 1D4D (7501)				Checksum CRC
			B3	B2	B1	B0	B3	B2	B1	B0	
01	03	08	41	20	00	00	42	C8	00	00	E4 6F

Readout of single register (code 06h)

Example 5 . Record of values 543 (0x021F) to register 4000 (0x0FA0)

Request:

Address of the device	Function	Address of the register		Value of register		Checksum CRC
		B1	B0	B1	B0	
01	06	0F	A0	02	1F	CA 54

Response:

Address of the device	Function	Address of the register		Value of register		Checksum CRC
		B1	B0	B1	B0	
01	06	0F	A0	02	1F	CA 54

Saving to n-registers (code 10h)

Example 6. Saving of 2 registers starting with the register

addressed 0FA3h (4003) Saved values 20, 2000.

Request:

Address of the device	Function	Addr. of reg.Hi	Addr. of reg.Lo	No. of reg. Hi	No. of reg. Lo	Number of bytes	Value for reg. 0FA3 (4003)		Value for reg. 0FA4 (4004)		Checksum CRC
							B1	B0	B1	B0	
01	10	0F	A3	00	02	04	00	14	07	D0	BB 9A

Response:

Address of the device	Function	Address of the register		Number of registers		Checksum CRC
		B1	B0	B1	B0	
01	10	0F	A3	00	02	B2 FE

Report identifying the device (code 11h)

Example 7. Device identification

Request:

Address of the device	Function	Checksum
01	11	C0 2C

Response:

Address	Function	Number of bytes	ID	Device state	Information field for device software version (e.g. "ND30PNET-1.00 b-1.06" - ND30PNET device with software version 1.00 and bootloader version 1.06)	Checksum (CRC)
01	11	19	CF	FF	4E 34 33 20 2D 31 2E 30 30 20 20 20 20 20 20 20 62 2D 31 2E 30 36 20	E0 24

8.3 Ethernet / Profinet

ND30PNET meters are equipped with a Fast Ethernet interface (100 Mb/s) for connecting the meter to an Ethernet network (using RJ45 socket). We use standard Profinet IO.

In the Profinet each device is identified by name, IP address, MAC address.

ND30PNET meter allows you to set:

name (NameOfStation) IP address.

The MAC address is set at the factory without the possibility of changes.

Standard Ethernet parameters of the meter are shown in table 9.

The meter is accompanied by GSDML (Generic Station Description) file containing the description of the properties of the device. The file is used in software used to configure devices in Profinet.

8.3.1 Ethernet / Profinet interface connection

To gain access to Ethernet services it is required to connect the meter to the network via the RJ45 socket located at the back / behind the panel / part of the meter, operating in accordance with Profinet protocol.

Description of RJ45 socket diodes function:

- yellow LED - lights up when the meter is properly connected to the Ethernet 100 Base-T, does not
  light up when the meter is not connected to a network or is connected to a 10-Base-T network.
- green LED - Tx/Rx illuminates when the meter sends and receives data, flickers

irregularly, when no data is transmitted the diode lights up permanently

To connect the meter to the network, use wire twisted pair of STP type (shielded) CAT 5 - for high-speed local area networks, frequency bandwidth up to 100 MHz according to the European standard EN 50173 with RJ-45 plug with core color (according to Table 13) in the following standard :

- EIA/TIA 568A for both connectors at the so-called simple connection of ND30PNET to the network hub or switch,
- EIA/TIA 568A for the first connector and EIA/TIA 568B for the second connector at the so-called patch cord connection (crossover) used, among others, when connecting ND30PNET to the computer.

Table 13

Conductor no.	Signal	Conductor color acc. to standard	
		EIA/TIA 568A	EIA/TIA 568B
1	TX+	white-green	white-orange
2	TX-	green	orange
3	RX+	white-orange	white-green
4	EPWR+	blue	blue
5	EPWR+	white-blue	white-blue
6	RX-	orange	green
7	EPWR-	white-brown	white-brown
8	EPWR-	brown	brown

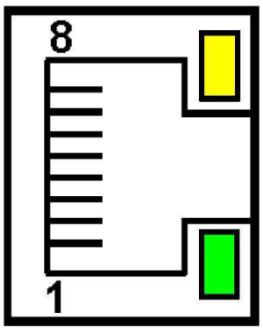

Fig.28. View and numbering of RJ45 slot pins

9 MAP OF REGISTERS OF ND30PNET METER

In ND30PNET meter the data is placed in 16- and 32-bit registers. Process variables and parameters of the meter are located in the address space of registers in a manner dependent on the type of the variable. Bits in 16-bit registers are numbered from the youngest to the oldest (b0-b15). 32-bit registers contain floating point numbers in IEEE-754 standard. Bytes sequence 3210 – the oldest is sent first.

Table 15

Address range	Value type	Description
4000 – 4159	Integer (16 bits)	Value placed in one 16-bit register. Registers for meter configuration. Description of registers can be found in table 16. Registers for recording and reading.
4200 – 4260	Integer (16 bits)	Value placed in one 16-bit register. Registers for configuration of programmable read-only register group Registers description can be found in table 15 Registers for recording and reading.
4300 - 4385	Integer (16 bits)	Value placed in one 16-bit register. Registers for configuration of displayed pages, Description of registers can be found in table 19. Registers for recording and reading.
4400- 4485	Integer (16 bits)	Value placed in single 16-bit register. Registers of statuses, energy values, the meter MAC address, configuration data. Description of registers can be found in table 20. Read-only registers.
4500- 4620	Integer (16 bits)	Value placed in single 16-bit register. Name of Profinet device. Description of registers can be found in table 21. Registers for recording and reading.
6000 – 6982	Float (2x16 bits)	Value placed in two successive 16-bit registers. Registers contain the same data as 32-bit registers of 7500 – 7953 range. Read-only registers. Byres order (1-0-3-2)
7000 - 7118	Float (2x16 bits)	Content of registers set in registers 4200 – 4359. Bytes order (3-2-1-0)
7200 – 7318	Float (2x16 bits)	Content of registers set in registers 4200 – 4359. Bytes order (1-0-3-2)
7400 - 7459	Float (32 bits)	Content of registers set in registers 4200 – 4359. Values placed in single 32-bit register.
7500 – 7991	Float (32 bits)	Values placed in single 32-bit register. Description of registers can be found in table 22. Read-only registers.
8000 - 8982	Float (2x16 bits)	Value placed in two successive 16-bit registers. Registers contain the same data as 32-bit registers of 7500 – 7953 range. Read-only registers. Byres order (3-2-1-0)

Table 16

Address of register	Ope-ration	Range	Description	Default
4000	RW	0…9999	Protection - password	0
4001	RW	0 .. 1	Connections layout 0 - 3Ph/4W 1 - 3Ph/3W 2 - 1Ph/2W	0
4002	RW	0 .. 2	Voltage at terminal 2: 0 - voltage of the first phase L1 1 - voltage of the second phase L2 2 - voltage of the third phase L3	0
4003	RW	0 .. 2	Voltage at terminal 5: 0 - voltage of the first phase L1 1 - voltage of the second phase L2 2 - voltage of the third phase L3	1
4004	RW	0 .. 2	Voltage at terminal 8: 0 - voltage of the first phase L1 1 - voltage of the second phase L2 2 - voltage of the third phase L3	2
4005	RW	0..5	Current at terminals 1,3: 0 - current of the first phase IL1 1 - reversed current direction of phase L1: -IL1 2 - current of the second phase IL2 3 - reversed current direction of phase L2: -IL2 4 - current of the third phase IL3 5 - reversed current direction of phase L3: -IL3	0
4006	RW	0..5	Current at terminals 4,6: 0 - current of the first phase IL1 1 - reversed current direction of phase L1: -IL1 2 - current of the second phase IL2 3 - reversed current direction of phase L2: -IL2 4 - current of the third phase IL3 5 - reversed current direction of phase L3: -IL3	2
4007	RW	0..5	Current at terminals 7,9: 0 - current of the first phase IL1 1 - reversed current direction of phase L1: -IL1 2 - current of the second phase IL2 3 - reversed current direction of phase L2: -IL2 4 - current of the third phase IL3 5 - reversed current direction of phase L3: -IL3	4
4008	RW	0.1	Current input range: 1A or 5 A: 0 - 1 A, 1 - 5 A	1
4009	RW	0.1	Voltage input range: 0 – 3 x 57,7/100 V; 1 – 3 x 230/400 V (version 1) 0 – 3 x 110/190 V; 1 – 3 x 400/690 V (version 2)	1
4011	RW	0..65535	Primary voltage of transformer, two younger bytes	100
4012	RW	1 .. 10000	Secondary voltage of transformer x 10	1000
4013	RW	1 .. 20000	Primary current of transformer	5
4014	RW	1 .. 1000	Secondary current of transformer	5
4015	RW	0...2	Averaging time of active power P Demand, apparent power S Demand, current I Demand 0 – 15, 1- 30, 2- 60 minutes	0

4016	RW	0.1	Synchronization with real time clock 0 - no synchronization 1 - synchronization with the clock	1
4017	RW		Reserved	
4018	RW		Reserved	
4019	RW		Reserved	
4020	RW		Leads resistance value for input T1 x 100	0
4021	RW		Leads resistance value for input T2 x 100	0
4022	RW		Reserved	
4023	RW		Reserved	
4024	RW	0…4	Resetting energy meters: 0 – no changes, 1- reset active energies, 2 – reset reactive energies, 3 – reset apparent energies, 4 – reset all energies	0
4025	RW	0.1	Resetting averaged parameters P Demand, S Demand, I	0
4026	RW	0.1	Resetting min, max	0
4027	RW	0.1	Resetting alarm signaling maintenance	0
4028	RW		Reserved	
4029	RW		Reserved	
4030	RW	0...4	Alarm output 1- logic actions of conditions 1, 2, 3 0 – C1 1 – C1 v C2 v C3 2 – C1 ∧C2 ∧ C3 3 – (C1 ∧C2) v C3 4 – (C1 v C2) ∧ C3	0
4031	RW	0.1	Alarm output 1- state of relay at alarm occurrence: 0 - relay off 1 - relay on	1
4032	RW	0.1	Alarm output 1- lock of alarm deactivation	0
4033	RW	0.1	Alarm output 1- signaling of alarm occurrence	0
4034	RW	0.1..43	Alarm output 1 - quantity for condition 1 (c1) (code acc. to table 8)	38
4035	RW	0..9	Alarm output 1 – type for condition 1: 0 – n_on, 1 – noFF, 2 – on, 3 – oFF, 4 – H_on, 5 – HoFF, 6 – 3non, 7 – 3noF, 8 – 3_on, 9 – 3_oF	0
4036	RW	-1440..0..1440 [‰]	Alarm output 1 - lower value of switching condition 1 of input nominal range	900
4037	RW	-1440..0..1440 [‰]	Alarm output 1 - upper value of switching condition 1 of input nominal range	1100
4038	RW	0..3600 s	Alarm output 1 – delay of condition 1 activation	0
4039	RW	0..3600 s	Alarm output 1 – delay of condition 1 deactivation	0

4040	RW	0..3600 s	Alarm output 1 – lock of condition 1 reactivation	0
4041	RW	0.1	Alarm output 1 – signaling condition 1 occurrence	0
4042	RW		Reserved	
4043	RW	0.1..43	Alarm output 1 - quantity for condition 2 (c2) (code acc. to table 8)	38
4044	RW	0..9	Alarm output 1 – type for condition 2: 0 – n_on, 1 – noFF, 2 – on, 3 – oFF, 4 – H_on, 5 – HoFF, 6 – 3non, 7 – 3noF, 8 – 3_on, 9 – 3_oF	0
4045	RW	-1440..0..1440 [‰]	Alarm output 1 - lower value of switching condition 2 of input nominal range	900

4046	RW	-1440..0..1440 [‰]	Alarm output 1 - upper value of switching condition 2 of input nominal range	1100
4047	RW	0..3600 s	Alarm output 1 – delay of condition 2 activation	0
4048	RW	0..3600 s	Alarm output 1 – delay of condition 2 deactivation	0
4049	RW	0..3600 s	Alarm output 1 – lock of condition 2 reactivation	0
4050	RW	0.1	Alarm output 1 – signaling condition 2 occurrence	0
4051	RW		Reserved	
4052	RW	0.1..43	Alarm output 1 - quantity for condition 3 (c3) (code acc. to table 8)	38
4053	RW	0..9	Alarm output 1 – type for condition 3: 0 – n_on, 1 – noFF, 2– on, 3 – oFF, 4 – H_on, 5 – HoFF, 6 – 3non, 7 – 3noF, 8 – 3_on, 9– 3_oF	0
4054	RW	-1440..0..1440 [‰]	Alarm output 1 - lower value of switching condition 3 of input nominal range	900
4055	RW	-1440..0..1440 [‰]	Alarm output 1 - upper value of switching condition 3 of input nominal range	1100
4056	RW	0..3600 s	Alarm output 1 – delay of condition 3 activation	0
4057	RW	0..3600 s	Alarm output 1 – delay of condition 3 deactivation	0
4058	RW	0..3600 s	Alarm output 1 – lock of condition 2 reactivation	0
4059	RW	0.1	Alarm output 1 – signaling condition 2 occurrence	0
4060	RW		Reserved	
4061	RW	0...4	Alarm output 2- logic actions of conditions 1, 2, 3 0 – C1 1 – C1 v C2 v C3 2 – C1 ∧C2 ∧ C3 3 – (C1 ∧C2) v C3 4 – (C1 v C2) ∧ C3	0
4062	RW	0.1	Alarm output 2- state of relay at alarm occurrence: 0 - relay off 1 - relay on	1
4063	RW	0.1	Alarm output 2- lock of alarm deactivation	0
4064	RW	0.1	Alarm output 2- signaling of alarm occurrence	0
4065	RW	0.1..43	Alarm output 2 - quantity for condition 1 (c1) (code acc. to table 8)	38
4066	RW	0..9	Alarm output 2 – type for condition 1: 0 – n_on, 1 – noFF, 2 – on, 3 – oFF, 4 – H_on, 5 – HoFF, 6 – 3non, 7 – 3noF, 8 – 3_on, 9 – 3_oF	0
4067	RW	-1440..0..1440 [‰]	Alarm output 2 - lower value of switching condition 1 of input nominal range	900
4068	RW	-1440..0..1440 [‰]	Alarm output 2 - upper value of switching condition 1 of input nominal range	1100
4069	RW	0..3600 s	Alarm output 2 – delay of condition 1 activation	0
4070	RW	0..3600 s	Alarm output 2 – delay of condition 1 deactivation	0
4071	RW	0..3600 s	Alarm output 2 – lock of condition 1 reactivation	0
4072	RW	0.1	Alarm output 2– signaling condition 1 occurrence	0
4073	RW		Reserved	
4074	RW	0.1..43	Alarm output 2 - quantity for condition 2 (c2) (code acc. to table 8)	38
4075	RW	0..9	Alarm output 2 – type for condition 2: 0 – n_on, 1 – noFF, 2 – on, 3 – oFF, 4 – H_on, 5 – HoFF, 6 – 3non, 7 – 3noF, 8 – 3_on, 9 – 3_oF	0

4076	RW	-1440..0..1440 [‰]	Alarm output 2 - lower value of switching condition 2 of input nominal range	900
4077	RW	-1440..0..1440 [‰]	Alarm output 2 - upper value of switching condition 2 of input nominal range	1100
4078	RW	0..3600 s	Alarm output 2 – delay of condition 2 activation	0
4079	RW	0..3600 s	Alarm output 2 – delay of condition 2 deactivation	0
4080	RW	0..3600 s	Alarm output 2 – lock of condition 2 reactivation	0
4081	RW	0.1	Alarm output 2– signaling condition 2 occurrence	0
4082	RW		Reserved	
4083	RW	0.1..43	Alarm output 2 - quantity for condition 3 (c3) (code acc. to table 8)	38
4084	RW	0..9	Alarm output 2 – type for condition 3: 0 – n_on, 1 – noFF, 2 – on, 3 – oFF, 4 – H_on, 5 – HoFF, 6 – 3non, 7 – 3noF, 8 – 3_on, 9 – 3_oF	0
4085	RW	-1440..0..1440 [‰]	Alarm output 2 - lower value of switching condition 3 of input nominal range	900
4086	RW	-1440..0..1440 [‰]	Alarm output 2 - upper value of switching condition 3 of input nominal range	1100
4087	RW	0..3600 s	Alarm output 2 – delay of condition 3 activation	0
4088	RW	0..3600 s	Alarm output 2 – delay of condition 3 deactivation	0
4089	RW	0..3600 s	Alarm output 2 – lock of condition 2 reactivation	0
4090	RW	0.1	Alarm output 2 – signaling condition 2 occurrence	0
4091	RW		Reserved	
4092	RW	0.1..43	Constant output 1 - quantity at the output / code acc. to tab.8 /	38
4093	RW	0..1	Constant output 1 - type: 0 – (0...20) mA; 1 – (4…20) mA;	0
4094	RW	-1440..0..1440 [‰]	Constant output 1 - lower value of input range in [‰] of nominal input range	0
4095	RW	-1440..0..1440 [‰]	Constant output 1 - upper value of input range in [‰] of nominal input range	1000
4096	RW	-2400..0..2400	Constant output 1 - lower value of current output range (1 = 10uA)	0
4097	RW	1..2400	Constant output 1 - upper value of current output range (1 = 10uA)	2000
4098	RW	0..2	Constant output 1 - manual activation: 0 – normal operation, 1 – value set from register 4096, 2- value set from register 4097	0
4099	RW		Reserved	
4100	RW	1..247	Address on the Modbus network.	1
4101	RW	0..3	Transmission mode: 0->8n2, 1>8e1, 2->8o1, 3->8n1	0
4102	RW	0..5	Transmission speed: 0->4800, 1->9600 2->19200, 3->38400, 4->57600, 5->115200	1
4103	RW		Reserved	
4104	RW	0.1	Update the change of transmission parameters	0
4105	RW		Reserved	
:	:	:	:::::::	:
4130	RW		Reserved	
4131	RW	0...65535	Third and second byte (B3.B2) of meter IP address, format IPv4: B3.B2.B1.B0	49320 (0xC0A8 = 192.168)
4132	RW	0...65535	First and zero byte (B1.B0) of meter IP address, format IPv4: B3.B2.B1.B0	356 (0x0164 = 1.100)

4133	RW	0...65535	Third and second byte (B3.B2) of meter subnet mask address, mask format: B3.B2.B1.B0	65535
4134	RW	0...65535	First and zero byte (B1.B0) of meter subnet mask address, mask format: B3.B2.B1.B0	65280
4135	RW	0...65535	Third and second byte (B3.B2) of meter default gateway address, format: B3.B2.B1.B0	49320
4136	RW	0...65535	First and zero byte (B1.B0) of meter default gateway address, format: B3.B2.B1.B0	257
4137	RW	0...65535	Third and second byte (B3.B2) of meter DNS address, format IPv4: B3.B2.B1.B0	0x0808= 8.8
4138	RW	0...65535	First and zero byte (B1.B0) of meter DNS address, format IPv4: B3.B2.B1.B0	0x0808= 8.8
4139	RW		Reserved	
4140	RW	0.1	Reserved	1
4141	RW	0 .. 2	Ethernet interface baud rate: 0 – automatic selection of baud rate 1 – 10 Mb/s 2 – 100 Mb/s	0
4142			Reserved	
:	:	:	::::::::	
4148			Reserved	
4149	RW	0.1	Memorizing new parameters of Ethernet interface and re-initiating the interface 0 – no changes, 1 – memorizing new parameters and re-initiating Ethernet interface,	0
4150	RW	0..2	Menu language: 0-ENG, 1-PL, 2-DE	0
4151	RW	0.1	Reserved	0
4152	RW	0.1	Recording standard parameters (with reset of energies and min and max averaged parameters) ,	0
4153	RW	0..59	Seconds	0
4154	RW	0...2359	Hour *100 + Minutes	0
4155	RW	101…1231	Month * 100 + day	101
4156	RW	2015…2077	Year	2015
4157	RW		Reserved	
4158	RW		Reserved	
4159	RW		Reserved	

Switching values of alarm conditions recorded in registers 4036, 4037, 4054, 4055, 4067, 4068, 4076, 4077, 4085, 4086 are multiplied by 10, e.g. 100% value should be written "1000".
The lower and upper input range values of the constant output recorded in the registers 4094, 4095 are multiplied by 10, e.g. 100% value should be written "1000".
The lower and upper current output range values recorded in the registers 4096, 4097 are multiplied by 100, e.g. 20 mA should be written "2000".

Table 17

Address of register	Ope-ration	Range	Description	Default
4200	RW	7500 .. 7957	Register 1 of programmable read-only register group	7500
4201	RW	7500 .. 7957	Register 2 of programmable read-only register group	7501
4202	RW	7500 .. 7957	Register 3 of programmable read-only register group	7502
4203	RW	7500 .. 7957	Register 4 of programmable read-only register group	7503
4204	RW	7500 .. 7957	Register 5 of programmable read-only register group	7504
4205	RW	7500 .. 7957	Register 6 of programmable read-only register group	7505
4206	RW	7500 .. 7957	Register 7 of programmable read-only register group	7506
4207	RW	7500 .. 7957	Register 8 of programmable read-only register group	7507

4208	RW	7500 .. 7957	Register 9 of programmable read-only register group	7508
4209	RW	7500 .. 7957	Register 10 of programmable read-only register group	7509
4210	RW	7500 .. 7957	Register 11 of programmable read-only register group	7510
4211	RW	7500 .. 7957	Register 12 of programmable read-only register group	7511

4212	RW	7500 .. 7957	Register 13 of programmable read-only register group	7512
4213	RW	7500 .. 7957	Register 14 of programmable read-only register group	7513
4214	RW	7500 .. 7957	Register 15 of programmable read-only register group	7514
4215	RW	7500 .. 7957	Register 16 of programmable read-only register group	7515
4216	RW	7500 .. 7957	Register 17 of programmable read-only register group	7516
4217	RW	7500 .. 7957	Register 18 of programmable read-only register group	7517
4218	RW	7500 .. 7957	Register 19 of programmable read-only register group	7518
4219	RW	7500 .. 7957	Register 20 of programmable read-only register group	7519
4220	RW	7500 .. 7957	Register 21 of programmable read-only register group	7520
4221	RW	7500 .. 7957	Register 22 of programmable read-only register group	7521
4222	RW	7500 .. 7957	Register 23 of programmable read-only register group	7522
4223	RW	7500 .. 7957	Register 24 of programmable read-only register group	7523
4224	RW	7500 .. 7957	Register 25 of programmable read-only register group	7524
4225	RW	7500 .. 7957	Register 26 of programmable read-only register group	7525
4226	RW	7500 .. 7957	Register 27 of programmable read-only register group	7526
4227	RW	7500 .. 7957	Register 28 of programmable read-only register group	7527
4228	RW	7500 .. 7957	Register 29 of programmable read-only register group	7528
4229	RW	7500 .. 7957	Register 30 of programmable read-only register group	7529
4230	RW	7500 .. 7957	Register 31 of programmable read-only register group	7530
4231	RW	7500 .. 7957	Register 32 of programmable read-only register group	7531
4232	RW	7500 .. 7957	Register 33 of programmable read-only register group	7532
4233	RW	7500 .. 7957	Register 34 of programmable read-only register group	7533
4234	RW	7500 .. 7957	Register 35 of programmable read-only register group	7534
4235	RW	7500 .. 7957	Register 36 of programmable read-only register group	7535
4236	RW	7500 .. 7957	Register 37 of programmable read-only register group	7536
4237	RW	7500 .. 7957	Register 38 of programmable read-only register group	7537
4238	RW	7500 .. 7957	Register 39 of programmable read-only register group	7538
4239	RW	7500 .. 7957	Register 40 of programmable read-only register group	7539
4240	RW	7500 .. 7957	Register 41 of programmable read-only register group	7540
4241	RW	7500 .. 7957	Register 42 of programmable read-only register group	7541
4242	RW	7500 .. 7957	Register 43 of programmable read-only register group	7542
4243	RW	7500 .. 7957	Register 44 of programmable read-only register group	7543
4244	RW	7500 .. 7957	Register 45 of programmable read-only register group	7544
4245	RW	7500 .. 7957	Register 46 of programmable read-only register group	7545
4246	RW	7500 .. 7957	Register 47 of programmable read-only register group	7546
4247	RW	7500 .. 7957	Register 48 of programmable read-only register group	7547
4248	RW	7500 .. 7957	Register 49 of programmable read-only register group	7548
4249	RW	7500 .. 7957	Register 50 of programmable read-only register group	7549
4250	RW	7500 .. 7957	Register 51 of programmable read-only register group	7550
4251	RW	7500 .. 7957	Register 52 of programmable read-only register group	7551
4252	RW	7500 .. 7957	Register 53 of programmable read-only register group	7552
4253	RW	7500 .. 7957	Register 54 of programmable read-only register group	7553
4254	RW	7500 .. 7957	Register 55 of programmable read-only register group	7554
4255	RW	7500 .. 7957	Register 56 of programmable read-only register group	7559
4256	RW	7500 .. 7957	Register 57 of programmable read-only register group	7560
4257	RW	7500 .. 7957	Register 58 of programmable read-only register group	7561
4258	RW	7500 .. 7957	Register 59 of programmable read-only register group	7566
4259	RW	7500 .. 7957	Register 60 of programmable read-only register group	7567
4260	RW	0.1	Restore factory group 0 – no changes, 1 – restore the factory group	0

Table 18

Address of 16-bit registers 2x16 1032/ 2x16 3210	Address of 32-bit registers	Operations	Description
7200/7000	7400	R	Content of register set in register 4200
7202/7002	7401	R	Content of register set in register 4201
7204/7004	7402	R	Content of register set in register 4202
7206/7006	7403	R	Content of register set in register 4203
7208/7008	7404	R	Content of register set in register 4204
7210/7010	7405	R	Content of register set in register 4205
7212/7012	7406	R	Content of register set in register 4206
7214/7014	7407	R	Content of register set in register 4207
7216/7016	7408	R	Content of register set in register 4208
7218/7018	7409	R	Content of register set in register 4209
7220/7020	7410	R	Content of register set in register 4210
7222/7022	7411	R	Content of register set in register 4211
7224/7024	7412	R	Content of register set in register 4212
7226/7026	7413	R	Content of register set in register 4213
7228/7028	7414	R	Content of register set in register 4214
7230/7030	7415	R	Content of register set in register 4215
7232/7032	7416	R	Content of register set in register 4216
7234/7034	7417	R	Content of register set in register 4217
7236/7036	7418	R	Content of register set in register 4218
7238/7038	7419	R	Content of register set in register 4219
7240/7040	7420	R	Content of register set in register 4220
7242/7042	7421	R	Content of register set in register 4221
7244/7044	7422	R	Content of register set in register 4222
7246/7046	7423	R	Content of register set in register 4223
7248/7048	7424	R	Content of register set in register 4224
7250/7050	7425	R	Content of register set in register 4225
7252/7052	7426	R	Content of register set in register 4226
7254/7054	7427	R	Content of register set in register 4227
7256/7056	7428	R	Content of register set in register 4228
7258/7058	7429	R	Content of register set in register 4229
7260/7060	7430	R	Content of register set in register 4230
7262/7062	7431	R	Content of register set in register 4231
7264/7064	7432	R	Content of register set in register 4232
7266/7066	7433	R	Content of register set in register 4233
7268/7068	7434	R	Content of register set in register 4234
7270/7070	7435	R	Content of register set in register 4235
7272/7072	7436	R	Content of register set in register 4236
7274/7074	7437	R	Content of register set in register 4237
7276/7076	7438	R	Content of register set in register 4238
7278/7078	7439	R	Content of register set in register 4239
7280/7080	7440	R	Content of register set in register 4240
7282/7082	7441	R	Content of register set in register 4241
7284/7084	7442	R	Content of register set in register 4242
7286/7086	7443	R	Content of register set in register 4243
7288/7088	7444	R	Content of register set in register 4244
7290/7090	7445	R	Content of register set in register 4245
7292/7092	7446	R	Content of register set in register 4246
7294/7094	7447	R	Content of register set in register 4247
7296/7096	7448	R	Content of register set in register 4248

7298/7098	7449	R	Content of register set in register 4249
7300/7100	7450	R	Content of register set in register 4250
7302/7102	7451	R	Content of register set in register 4251
7304/7104	7452	R	Content of register set in register 4252
7306/7106	7453	R	Content of register set in register 4253

7308/7108	7454	R	Content of register set in register 4254
7310/7110	7455	R	Content of register set in register 4255
7312/7112	7456	R	Content of register set in register 4256
7314/7114	7457	R	Content of register set in register 4257
7316/7116	7458	R	Content of register set in register 4258
7318/7118	7459	R	Content of register set in register 4259

Table 19

Address of register	Ope-ration	Range	Description	Default
4300	RW	1…3	Level of brightness: 1 – Minimum, 2- Medium 3 - Maximum	3
4301	RW	0 .. 3600	Time to min. brightness	0
4302	RW		Reserved	0
4303	RW	0x0001...0x03FF	Enabling displaying pages Bit0 – page 1, Bit1 – page 2, ...Bit9 - page 10	0x03FF
4304	RW		Reserved	
4305	RW	00..49	Page 1 display 1, U1	1
4306	RW	00..49	Page 1 display 2, U2	10
4307	RW	00..49	Page 1 display 3, U3	19
4308	RW	00..49	Page 1 display 4, f	37
4309	RW	00..49	Page 1 display 5, I1	2
4310	RW	00..49	Page 1 display 6, I2	11
4311	RW	00..49	Page 1 display 7, I3	20
4312	RW	00..49	Page 1 display 8, I avg	28
4313	RW	00..49	Page 2 display 1, U12	38
4314	RW	00..49	Page 2 display 2, U23	39
4315	RW	00..49	Page 2 display 3, U31	40
4316	RW	00..49	Page 2 display 4,U123	41
4317	RW	00..49	Page 2 display 5, ΣP	30
4318	RW	00..49	Page 2 display 6, ΣQ	31
4319	RW	00..49	Page 2 display 7, ΣS	32
4320	RW	00..49	Page 2 diplay 8, PF avg	33
4321	RW	00..49	Page 3 display 1, P1	3
4322	RW	00..49	Page 3 display 2, P2	12
4323	RW	00..49	Page 3 display 3, P3	21
4324	RW	00..49	Page 3 display 4, ΣP	30
4325	RW	00..49	Page 3 display 5, PF1	6
4326	RW	00..49	Page 3 display 6, PF2	15
4327	RW	00..49	Page 3 display 7, PF3	24
4328	RW	00..49	Page 3 diplay 8, PF avg	33
4329	RW	00..49	Page 4 display 1, P1	3
4330	RW	00..49	Page 4 display 2, P2	12
4331	RW	00..49	Page 4 display 3, P3	21
4332	RW	00..49	Page 4 display 4, ΣP	30
4333	RW	00..49	Page 4 display 5, Q1	4
4334	RW	00..49	Page 4 display 6, Q2	13
4335	RW	00..49	Page 4 display 7, Q3	22

4336	RW	00..49	Page 4 display 8, ΣQ	31
4337	RW	00..49	Page 5 display 1, THD U1	8
4338	RW	00..49	Page 5 display 2, THD U2	17
4339	RW	00..49	Page 5 display 3, THD U3	26
4340	RW	00..49	Page 5 display 4, THD U	35
4341	RW	00..49	Page 5 display 5, THD I1	9
4342	RW	00..49	Page 5 display 6, THD I2	18
4343	RW	00..49	Page 5 display 7, THD I3	27
4344	RW	00..49	Page 5 display 8, THD I	36
4345	RW	00..49	Page 6 display 1, U1	1
4346	RW	00..49	Page 6 display 2, I1	2
4347	RW	00..49	Page 6 display 3, P1	3
4348	RW	00..49	Page 6 display 4, Q1	4
4349	RW	00..49	Page 6 display 5, S1	5
4350	RW	00..49	Page 6 display 6, PF1	6
4351	RW	00..49	Page 6 display 7, tg1	7
4352	RW	00..49	Page 6 display 8, f	37
4353	RW	00..49	Page 7 display 1, U2	10
4354	RW	00..49	Page 7 display 2, I2	11
4355	RW	00..49	Page 7 display 3, P2	12
4356	RW	00..49	Page 7 display 4, Q2	13
4357	RW	00..49	Page 7 display 5, S2	14
4358	RW	00..49	Page 7 display 6, PF2	15
4359	RW	00..49	Page 7 display 7, tg2	16
4360	RW	00..49	Page 7 display 8, f	37
4361	RW	00..49	Page 8 display 1, U3	19
4362	RW	00..49	Page 8 display 2, I3	20
4363	RW	00..49	Page 8 display 3, P3	21
4364	RW	00..49	Page 8 display 4, Q3	22
4365	RW	00..49	Page 8 display 5, S3	23
4366	RW	00..49	Page 8 display 6, PF3	24
4367	RW	00..49	Page 8 display 7, tg3	25
4368	RW	00..49	Page 8 display 8, f	37
4369	RW	00..49	Page 9 display 1, ΣP	30
4370	RW	00..49	Page 9 display 2, ΣQ	31
4371	RW	00..49	Page 9 display 3, I avg	29
4372	RW	00..49	Page 9 display 4 I(N)	45
4373	RW	00..49	Page 9 display 5, P DMD	42
4374	RW	00..49	Page 9 display 6, S DMD	43
4375	RW	00..49	Page 9 display 7, I DMD	44
4376	RW	00..49	Page 9 display 8, f	37
4377	RW	00..49	Page 10 display 1, ΣP	30
4378	RW	00..49	Page 10 display 2, ΣQ	31
4379	RW	00..49	Page 10 display 3, ΣS	32
4380	RW	00..49	Page 10 display 4, En S	52
4381	RW	00..49	Page 10 display 5, +En P	48
4382	RW	00..49	Page 10 display 6, -En P	49
4383	RW	00..49	Page 10 display 7, En Q	50
4384	RW	00..49	Page 10 display 8, En Q	51

4385	RW	0..3	Restore default pages 0 - no 1 - 3Ph/4W 2 - 3Ph/3W 3 - 1PH/2W	0

Table 20

Address of register	Ope-ration	Range	Description	Default
4400	R		Reserved	
4401	R	0..65535	Identifier	D9
4402	R	0..65535	Bootloader version x 100	-
4403	R	0..65535	Program version x100	-
4404	R		Reserved	
4405	R	0..65535	Ordering code	-
4406	R	0..65535	Nominal voltage x10	577/2300
4407	R	0..65535	Nominal voltage x10	1100/4000
4408	R	0..65535	Nominal current (1 A) x 100	100
4409	R	0..65535	Nominal current (5 A) x 100	500
4410	R		Reserved	
4411	R	0..65535	Seventh and sixth byte (B7.B6) of serial number , format B7:B6:B5:B4:B3:B2:B1:B0	-
4412	R	0..65535	Fifth and fourth byte (B5.B4) of serial number , format B7:B6:B5:B4:B3:B2:B1:B0	-
4413	R	0..65535	Third and second byte (B3.B2) of serial number , format B7:B6:B5:B4:B3:B2:B1:B0	-
4414	R	0..65535	First and zero byte (B1.B0) of serial number , format B7:B6:B5:B4:B3:B2:B1:B0	-
4415	R	0..65535	Status register 1– description below	0
4416	R	0..65535	Status register 2– description below	0
4417	R	0..65535	Status register 3– description below	0
4418	R	0..65535	Status register 4– description below	0
4419	R	0..65535	Status register 5– description below	0
4420	R	0..65535	Status register 6– description below	0
4421	R	0...65535	Fifth and fourth byte (B5.B4) of meter MAC address, format B5:B4:B3:B2:B1:B0	-
4422	R	0...65535	Third and second byte (B3.B2) of meter MAC address, format B5:B4:B3:B2:B1:B0	-
4423	R	0...65535	First and zero byte (B1.B0) of meter MAC address, format B5:B4:B3:B2:B1:B0	-
4424	R		Reserved	0
4425	R		Reserved	0
4426	R	0..152	Active imported energy, two older bytes	0
4427	R	0..65535	Active imported energy, two younger bytes	0
4428	R	0..152	Active exported energy, two older bytes	0
4429	R	0..65535	Active exported energy, two younger bytes	0
4430	R	0..152	Reactive inductive energy, two older bytes	0
4431	R	0..65535	Reactive inductive energy, two younger bytes	0
4432	R	0..152	Reactive capacitive energy, two older bytes	0
4433	R	0..65535	Reactive capacitive energy, two younger bytes	0
4434	R	0..152	Apparent energy, two older bytes	0
4435	R	0..65535	Apparent energy, two younger bytes	0
4436	R		Reserved	
4437	R		Reserved	
4438	R	0..2000/ 0..1	Resistance Pt100 x100 (T1)/ State of binary input B1	-
4439	R	0..2000/ 0..1	Resistance Pt100 x100 (T2)/ State of binary input B2	-
4440	R		Reserved	
:	:		:::::::	
4446	R		Reserved	0

4447	R		Reserved	0
...				
4462	R	0..152	Active imported 3-phase energy for the previous year,	0
4463	R	0..65535	Active imported 3-phase energy for the previous year,	0
4464	R	0..152	Active exported 3-phase energy for the previous year,	0
4465	R	0..65535	Active exported 3-phase energy for the previous year,	0
4466	R	0..152	Active imported 3-phase energy for the current year,	0
4467	R	0..65535	Active imported 3-phase energy for the current year,	0
4468	R	0..152	Active exported 3-phase energy for the current year,	0
4469	R	0..65535	Active exported 3-phase energy for the current year,	0
4470	R	0..152	Active imported 3-phase energy for the current month,	0
4471	R	0..65535	Active imported 3-phase energy for the current month,	0
4472	R	0..152	Active exported 3-phase energy for the current month,	0
4473	R	0..65535	Active exported 3-phase energy for the current month,	0
4474	R	0..152	Active imported 3-phase energy for the current week,	0
4475	R	0..65535	Active imported 3-phase energy for the current week,	0
4476	R	0..152	Active exported 3-phase energy for the current week,	0
4477	R	0..65535	Active exported 3-phase energy for the current week,	0
4478	R	0..152	Active imported 3-phase energy for the current 48 hours,	0
4479	R	0..65535	Active imported 3-phase energy for the current 48 hours,	0
4480	R	0..152	Active exported 3-phase energy for the current 48 hours,	0
4481	R	0..65535	Active exported 3-phase energy for the current 48 hours,	0
4482	R	0..152	Active imported 3-phase energy for the current 24 hours,	0
4483	R	0..65535	Active imported 3-phase energy for the current 24 hours,	0
4484	R	0..152	Active exported 3-phase energy for the current 24 hours,	0
4485	R	0..65535	Active exported 3-phase energy for the current 24 hours,	0

Energies are available in hundreds of watt-hours (Varohours) in the dual 16-bit registers, therefore when calculating the value of each energy registers must be divided by 100, i.e .:

Active imported energy = (reg. value 4426 x 65536 + reg. value 4427) / 100 [kWh]
Active exported energy = (reg. value 4428 x 65536 + reg. value 4429) / 100 [kWh]
Reactive inductive energy = (reg. value 4430 x 65536 + reg. value 4431) / 100 [kVarh]
Reactive capacitive energy = (reg. value 4432 x 65536 + reg. value 4433) / 100 [kVarh]
Apparent energy = (reg. value 4434 x 65536 + reg. value 4435) / 100 [kVAh]

Similarly, energy from registers 4462 to 4485 should be converted

Status register 1 of the device (address 4415, R):

Bit 15 – “1” – FRAM memory damage error
Bit 14 – “1” – no input calibration
Bit 13 – ”1” – no output calibration
Bit 12 – “1” – PT100 calibration error
Bit 11 – “1” – error in configuration registers
Bit 10 – “1” – error in registers of displayed pages
Bit 9 – “1” – error in configuration registers of programmable read-only register group
Bit 8 – “1” – error of energy value
Bit 7 – “1” – phase sequence
Bit 6 – reserved
Bit 5 – “1” – presence of binary inputs
Bit 4 – “1” – presence of analog output
Bit 3 – “1” – presence of PT100
Bit 2 – “1” – presence of Ethernet
Bit 1 – “1” – used battery of RTC
Bit 0 – reserved

Status register 2 (address 4416, R):

Bit 15 - “1” – signaling of condition 3 occurrence for alarm 2
Bit 14 - “1” – signaling of condition 2 occurrence for alarm 2
Bit 13 - “1” – signaling of condition 1 occurrence for alarm 2
Bit 12 - “1” – signaling of alarm 2 occurrence
Bit 11 - “1” – alarm 2 condition 3 active
Bit 10 - “1” – alarm 2 condition 2 active
Bit 9 - “1” – alarm 2 condition 1 active
Bit 8 - “1” – alarm 2 active

Bit 7 - “1” – signaling of condition 3 occurrence for alarm 1
Bit 6 - “1” – signaling of condition 2 occurrence for alarm 1
Bit 5 - “1” – signaling of condition 1 occurrence for alarm 1
Bit 4 - “1” – signaling of alarm 1 occurrence
Bit 3 - “1” – alarm 1 condition 3 active

Bit 2 - “1” – alarm 1 condition 2 active
Bit 1 - “1” – alarm 1 condition 1 active
Bit 0 - “1” – alarm 1 active

Status register 3 (address 4417, R):

Bit 15 – Ethernet connected

Bit 14 .. 0 – reserved

Status register 4 (address 4418, R) type of reactive power :
Bit 15 – reserved

Bit 14 – “1” – “Demand” – capacitive 3L maximum

Bit 13 – “1” – “Demand” – capacitive 3L minimum

Bit 12 - “1” – “Demand” – capacitive 3L

Bit 11 – “1” – capacitive 3L maximum

Bit 10 – “1” – capacitive 3L minimum

Bit 9 – “1” – capacitive 3L
Bit 8 – “1” – capacitive L3 maximum

Bit 7 – “1” – capacitive L3 minimum

Bit 6 – “1” – capacitive L3
Bit 5 – “1” – capacitive L2 maximum
Bit 4 – “1” – capacitive L2 minimum
Bit 3 – “1” – capacitive L2
Bit 2 – “1” – capacitive L1 maximum
Bit 1 – “1” – capacitive L1 minimum
Bit 0 – “1” – capacitive L1

Status register 5 (address 4419, R):

Bit 8 – “1” – alarm 1, condition 3 for L3 phase active
Bit 7 – “1” – alarm 1, condition 3 for L2 phase active
Bit 6 – “1” – alarm 1, condition 3 for L1 phase active
Bit 5 – “1” – alarm 1, condition 2 for L3 phase active
Bit 4 – “1” – alarm 1, condition 2 for L2 phase active
Bit 3 – “1” – alarm 1, condition 2 for L1 phase active
Bit 2 – “1” – alarm 1, condition 1 for L3 phase active
Bit 1 – “1” – alarm 1, condition 1 for L2 phase active
Bit 0 – “1” – alarm 1, condition 1 for L1 phase active

Status register 6 (address 4420, R):

Bit 8 – “1” – alarm 2, condition 3 for L3 phase active
Bit 7 – “1” – alarm 2, condition 3 for L2 phase active
Bit 6 – “1” – alarm 2, condition 3 for L1 phase active
Bit 5 – “1” – alarm 2, condition 2 for L3 phase active
Bit 4 – “1” – alarm 2, condition 2 for L2 phase active
Bit 3 – “1” – alarm 2, condition 2 for L1 phase active
Bit 2 – “1” – alarm 2, condition 1 for L3 phase active
Bit 1 – “1” – alarm 2, condition 1 for L2 phase active
Bit 0 – “1” – alarm 2, condition 1 for L1 phase active

Table 21

Address of register	Ope-ration	Range	Description	Default
4500	RW	0…65535	2 first signs of the Profinet device name in the system	
: :	RW	: :	: :	
4619	RW		238;239 sign of the Profinet device name in the system	
4620	RW	0.1	Memorizing new parameters of Profinet interface and re-initiating the interface 0 – no changes, 1 – memorizing new parameters and re-initiating Profinet interface,	0

Table 22

Address of 16 bit registers 2x16 1032/ 2x16 3210	Address of 32-bit registers	Operations	Description	Unit	3Ph / 4W	3Ph / 3W	1Ph / 2W
6000/8000	7500	R	Voltage of L1 phase	V	√	x	√
6002/8002	7501	R	Current of L1 phase	A	√	√	√
6004/8004	7502	R	Active power of L1 phase	W	√	x	√
6006/8006	7503	R	Reactive power of L1 phase	VAr	√	x	√
6008/8008	7504	R	Apparent power of L1 phase	VA	√	x	√
6010/8010	7505	R	Factor of active power of L1 phase (PF1=P1/S1)	-	√	x	√
6012/8012	7506	R	tg factor φ of L1 phase (tg1 =Q1/P1)	-	√	x	√
6014/8014	7507	R	THD U1*	%	√	x	√
6016/8016	7508	R	THD I1	%	√	x	√
6018/8018	7509	R	Voltage of L2 phase	V	√	x	x
6020/8020	7510	R	Current of L2 phase	A	√	√	x
6022/8022	7511	R	Active power of L2 phase	W	√	x	x
6024/8024	7512	R	Reactive power of L2 phase	VAr	√	x	x
6026/8026	7513	R	Apparent power of L2 phase	VA	√	x	x
6028/8028	7514	R	Factor of active power of L2 phase (PF2=P2/S2)	-	√	x	x
6030/8030	7515	R	tg factor φ of L2 phase (tg2 =Q2/P2)	-	√	x	x
6032/8032	7516	R	THD U2*	%	√	x	x
6034/8034	7517	R	THD I2	%	√	x	x
6036/8036	7518	R	Voltage of L3 phase	V	√	x	x
6038/8038	7519	R	Current of L3 phase	A	√	√	x
6040/8040	7520	R	Active power of L3 phase	W	√	x	x
6042/8042	7521	R	Reactive power of L3 phase	VAr	√	x	x
6044/8044	7522	R	Apparent power of L3 phase	VA	√	x	x
6046/8046	7523	R	Factor of active power of L3 phase (PF3=P3/S3)	-	√	x	x
6048/8048	7524	R	tg factor φ of L3 phase (tg3 =Q3/P3)	-	√	x	x
6050/8050	7525	R	THD U3*	%	√	x	x
6052/8052	7526	R	THD I3	%	√	x	x
6054/8054	7527	R	Average 3-phase voltage	V	√	x	x
6056/8056	7528	R	Average 3-phase current	A	√	√	x
6058/8058	7529	R	3-phase active power (P1+P2+P3)	W	√	√	x
6060/8060	7530	R	3-phase reactive power (Q1+Q2+Q3)	VAr	√	√	x
6062/8062	7531	R	3-phase apparent power (S1+S2+S3)	VA	√	√	x
6064/8064	7532	R	3-phase active power factor (PF=P/S)	-	√	√	x
6066/8066	7533	R	tg factor φ 3-phase average (tg=Q/P)	-	√	√	x
6068/8068	7534	R	THD U* 3-phase average	%	√	x	x
6070/8070	7535	R	THD I 3-phase average	%	√	x	x
6072/8072	7536	R	Frequency	f	√	√	√

6074/8074	7537	R	Phase-to-phase voltage L1-2	V	√	√	x
6076/8076	7538	R	Phase-to-phase voltage L2-3	V	√	√	x
6078/8078	7539	R	Phase-to-phase voltage L3-1	V	√	√	x
6080/8080	7540	R	Average phase-to-phase voltage L1-2	V	√	√	x
6082/8082	7541	R	averaged active power (P Demand)	W	√	√	x
6084/8084	7542	R	averaged apparent power (S Demand)	VA	√	√	x
6086/8086	7543	R	averaged current (I Demand)	A	√	√	x
6088/8088	7544	R	Current in neutral wire (calculated from vectors)	A	√	x	x
6090/8090	7545	R	Active imported energy 3-phase (number of register 7546 overflows, reset after 9999.9 MWh is reached)	100 MWh	√	√	√
6092/8092	7546	R	Active imported energy 3 –phase (counter up to 99999.99 kWh)	kWh	√	√	√
6094/8094	7547	R	Active exported energy 3-phase (number of register 7548 overflows, reset after 9999.9 MWh is reached)	100 MWh	√	√	√
6096/8096	7548	R	Active exported energy 3 –phase (counter up to 99999.99 kWh)	kWh	√	√	√
6098/8098	7549	R	Reactive exported energy 3-phase (number of register 7550 overflows, reset after 9999.9 MVArh is reached)	100 MVArh	√	√	√
6100/8100	7550	R	Reactive inductive energy 3 –phase (counter up to 99999.99 kVArh)	kVArh	√	√	√
6102/8102	7551	R	Reactive capacitive energy 3-phase (number of register 7552 overflows, reset after 9999.9 MVArh is reached)	100 MVArh	√	√	√
6104/8104	7552	R	Reactive capacitive energy 3 –phase (counter up to 99999.99 kVArh)	kVArh	√	√	√
6106/8106	7553	R	Apparent energy 3-phase (number of register 7554 overflows, reset after 9999.9 MVAh is	100 MVAh	√	√	√
6108/8108	7554	R	Apparent energy (caounter up to 99999.99 kVAh)	kVAh	√	√	√
6110/8110	7555	R	Time – seconds	sec	√	√	√
6112/8112	7556	R	Time – hours, minutes		√	√	√
6114/8114	7557	R	Date - month, day		√	√	√
6116/8116	7558	R	Year – 2014 - 2100		√	√	√
6118/8118	7559	R	Status register 1	-	√	√	√
6120/8120	7560	R	Status register 2	-	√	√	√
6122/8122	7561	R	Status register 3	-	√	√	√
6124/8124	7562	R	Status register 4	-	√	√	√
6126/8126	7563	R	Status register 5	-	√	√	√
6128/8128	7564	R	Status register 6	-	√	√	√
6130/8130	7565	R	Energizing constant output 1	mA	√	√	√
6132/8132	7566	R	Temperature Pt100 1/ State of binary input B1	°C/	√	√	√
6134/8134	7567	R	Temperature PT100 2/ State of binary input B1	°C/	√	√	√
6136/8136	7568	R	Voltage L1 min	V	√	x	√
6138/8138	7569	R	Voltage L1 max	V	√	x	√
6140/8140	7570	R	Voltage L2 min	V	√	x	x
6142/8142	7571	R	Voltage L2 max	V	√	x	x
6144/8144	7572	R	Voltage L3 min	V	√	x	x
6146/8146	7573	R	Voltage L3 max	V	√	x	x
6148/8148	7574	R	Current L1 min	A	√	√	x
6150/8150	7575	R	Current L1 max	A	√	√	x
6152/8152	7576	R	Current L2 min	A	√	√	x
6154/8154	7577	R	Current L2 max	A	√	√	x
6156/8156	7578	R	Current L3 min	A	√	√	x
6158/8158	7579	R	Current L3 max	A	√	√	x

6160/8160	7580	R	Active power L1 min	W	√	x	√
6162/8162	7581	R	Active power L1 max	W	√	x	√

6164/8164	7582	R	Active power L2 min	W	√	x	x
6166/8166	7583	R	Active power L2 max	W	√	x	x
6168/8168	7584	R	Active power L3 min	W	√	x	x
6170/8170	7585	R	Active power L3 max	W	√	x	x
6172/8172	7586	R	Reactive power L1 min	Var	√	x	√
6174/8174	7587	R	Reactive power L1 max	Var	√	x	√
6176/8176	7588	R	Reactive power L2 min	Var	√	x	x
6178/8178	7589	R	Reactive power L2 max	Var	√	x	x
6180/8180	7590	R	Reactive power L3 min	Var	√	x	x
6182/8182	7591	R	Reactive power L3 max	Var	√	x	x
6184/8184	7592	R	Apparent power L1 min	VA	√	x	√
6186/8186	7593	R	Apparent power L1 max	VA	√	x	√
6188/8188	7594	R	Apparent power L2 min	VA	√	x	x
6190/8190	7595	R	Apparent power L2 max	VA	√	x	x
6192/8192	7596	R	Apparent power L3 min	VA	√	x	x
6194/8194	7597	R	Apparent power L3 max	VA	√	x	x
6196/8196	7598	R	Power factor (PF) L1 min	-	√	x	√
6198/8198	7599	R	Power factor (PF) L1 max	-	√	x	√
6200/8200	7600	R	Power factor (PF) L2 min	-	√	x	x
6202/8202	7601	R	Power factor (PF) L2 max	-	√	x	x
6204/8204	7602	R	Power factor (PF) L3 min	-	√	x	x
6206/8206	7603	R	Power factor (PF) L3 max	-	√	x	x
6208/8208	7604	R	Ratio of reactive to active power L1 min	-	√	x	√
6210/8210	7605	R	Ratio of reactive to active power L1 max	-	√	x	√
6212/8212	7606	R	Ratio of reactive to active power L2 min	-	√	x	x
6214/8214	7607	R	Ratio of reactive to active power L2 max	-	√	x	x
6216/8216	7608	R	Ratio of reactive to active power L3 min	-	√	x	x
6218/8218	7609	R	Ratio of reactive to active power L3 max	-	√	x	x
6220/8220	7610	R	Phase-to-phase voltage L1-2 min	V	√	√	x
6222/8222	7611	R	Phase-to-phase voltage L1-2 max	V	√	√	x
6224/8224	7612	R	Phase-to-phase voltage L2-3 min	V	√	√	x
6226/8226	7613	R	Phase-to-phase voltage L2-3 max	V	√	√	x
6228/8228	7614	R	Phase-to-phase voltage L3-1 min	V	√	√	x
6230/8230	7615	R	Phase-to-phase voltage L3-1 max	V	√	√	x
6232/8232	7616	R	Average 3-phase voltage min	V	√	x	x
6234/8234	7617	R	Average 3-phase voltage max	V	√	x	x
6236/8236	7618	R	Average 3-phase current min	A	√	√	x
6238/8238	7619	R	Average 3-phase current max	A	√	√	x
6240/8240	7620	R	3-phase active power min	W	√	√	x
6242/8242	7621	R	3-phase active power max	W	√	√	x
6244/8244	7622	R	3-phase reactive power min	var	√	√	x
6246/8246	7623	R	3-phase reactive power max	var	√	√	x
6248/8248	7624	R	3-phase apparent power min	VA	√	√	x
6250/8250	7625	R	3-phase apparent power max	VA	√	√	x
6252/8252	7626	R	Power factor (PF) min	-	√	√	x
6254/8254	7627	R	Power factor (PF) max	-	√	√	x
6256/8256	7628	R	Ratio of reactive to active power 3-phase average min	-	√	√	x

6258/8258	7629	R	Ratio of reactive to active power 3-phase average max	-	√	√	x
6260/8260	7630	R	Frequency min	Hz	√	√	√
6262/8262	7631	R	Frequency max	Hz	√	√	√

6264/8264	7632	R	Average phase-to-phase voltage min	V	√	√	x
6266/8266	7633	R	Average phase-to-phase voltage max	V	√	√	x
6268/8268	7634	R	Averaged active power (P Demand) min	W	√	√	√
6270/8270	7635	R	Averaged active power (P Demand) max	W	√	√	√
6272/8272	7636	R	Averaged apparent power (S Demand) min	VA	√	√	√
6274/8274	7637	R	Averaged apparent power (S Demand) max	VA	√	√	√
6276/8276	7638	R	Averaged current (I Demand) min	A	√	√	√
6278/8278	7639	R	Averaged current (I Demand) max	A	√	√	√
6280/8280	7640	R	Current in neutral wire min	A	√	x	x
6282/8282	7641	R	Current in neutral wire max	A	√	x	x
6284/8284	7642	R	Temperature T1 min/ State of binary input B1 min	°C/	√	√	√
6286/8286	7643	R	Temperature T1 max/ State of binary input B1 max	°C/	√	√	√
6288/8288	7644	R	Temperature T2 min/ State of binary input B2 min	°C/	√	√	√
6290/8290	7645	R	Temperature T2 max/ State of binary input B2 max	°C/	√	√	√
6292/8292	7646	R	THD U1 min	%	√	x	√
6294/8294	7647	R	THD U1 max	%	√	x	√
6296/8296	7648	R	THD U2 min	%	√	x	x
6298/8298	7649	R	THD U2 max	%	√	x	x
6300/8300	7650	R	THD U3 min	%	√	x	x
6302/8302	7651	R	THD U3 max	%	√	x	x
6304/8304	7652	R	THD U min	%	√	x	x
6306/8306	7653	R	THD U max	%	√	x	x
6308/8308	7654	R	THD I1 min	%	√	x	√
6310/8310	7655	R	THD I1 max	%	√	x	√
6312/8312	7656	R	THD I2 min	%	√	x	x
6314/8314	7657	R	THD I2 max	%	√	x	x
6316/8316	7758	R	THD I3 min	%	√	x	x
6318/8318	7759	R	THD I3 max	%	√	x	x
6320/8320	7660	R	THD I min	%	√	x	x
6322/8322	7661	R	THD I max	%	√	x	x
6324/8324	7662	R	HarU1[2] 2nd harmonics of voltage of L1 phase	%	√	x	√
6326/8326	7663	R	HarU1[3] 3rd harmonics of voltage of L1 phase	%	√	x	√
:	:	R	:				
:	:	R	:				
6420/8420	7710	R	HarU1[50] 50th harmonics of voltage of L1 phase	%	√	x	√
6422/8422	7711	R	HarU1[51] 51st harmonics of voltage of L1 phase	%	√	x	√
6424/8424	7712	R	HarU2[2] 2nd harmonics of voltage of L2 phase	%	√	x	x
6426/8426	7713	R	HarU2[3] 3rd harmonics of voltage of L2 phase	%	√	x	x
:	:	R	:				
:	:	R	:				
6520/8520	7760	R	HarU2[50] 50th harmonics of voltage of L2 phase	%	√	x	x
6522/8522	7761	R	HarU2[51] 51st harmonics of voltage of L2 phase	%	√	x	x
6524/8524	7762	R	HarU3[2] 2nd harmonics of voltage of L3 phase	%	√	x	x
6526/8526	7763	R	HarU3[3] 3rd harmonics of voltage of L3 phase	%	√	x	x
:	:	R	:				
:	:	R	:				
6620/8620	7810	R	HarU3[50] 50th harmonics of voltage of L3 phase	%	√	x	x
6622/8622	7811	R	HarU3[51] 51st harmonics of voltage of L3 phase	%	√	x	x
6624/8624	7812	R	HarI1[2] 2nd harmonics of current of L1 phase	%	√	x	√
6626/8626	7813	R	HarI1[3] 3rd harmonics of current of L1 phase	%	√	x	√

:	:	R	:				
:	:	R	:				
6720/8720	7860	R	HarI1[50] 50th harmonics of current of L1 phase	%	√	x	√
6722/8722	7861	R	HarI1[51] 51st harmonics of current of L1 phase	%	√	x	√
6724/8724	7862	R	HarI2[2] 2nd harmonics of current of L2 phase	%	√	x	x
6726/8726	7863	R	HarI2[3] 3rd harmonics of current of L2 phase	%	√	x	x
:	:	R	:				
:	:	R	:				
6820/8820	7910	R	HarI2[50] 50th harmonics of current of L2 phase	%	√	x	x
6822/8822	7911	R	HarI2[51] 51st harmonics of current of L2 phase	%	√	x	x
6824/8824	7912	R	HarI3[2] 2nd harmonics of current of L3 phase	%	√	x	x
6826/8826	7913	R	HarI3[3] 3rd harmonics of current of L3 phase	%	√	x	x
:	:	R	:				
:	:	R	:				
6920/8920	7960	R	HarI3[50] 50th harmonics of current of L3 phase	%	√	x	x
6922/8922	7961	R	HarI3[51] 51st harmonics of current of L3 phase	%	√	x	x
6924/8924	7962	R	Mean reactive power	var	√	√	√
6926/8926	7963	R	Mean reactive power min	var	√	√	√
6928/8928	7964	R	Mean reactive power max	var	√	√	√
6930/8930	7965	R	Mean active power factor	-	√	√	√
6932/8932	7966	R	Mean active power factor min	-	√	√	√
6934/8934	7967	R	Mean active power factor max	-	√	√	√
6936/8936	7968	R	Active imported 3-phase energy for the previous year (overflows number of register 7563, reset after 9999.9 MWh is reached)	100 MWh	√	√	√
6938/8938	7969	R	Active imported 3-phase energy for the previous year (counter up to 9999.99 kWh)	kWh	√	√	√
6940/8940	7970	R	Active exported 3-phase energy for the previous year (overflows number of register 7565, reset after 9999.9 MWh is reached)	100 MWh	√	√	√
6942/8942	7971	R	Active exported 3-phase energy for the previous year (counter up to 9999.99 kWh)	kWh	√	√	√
6944/8944	7972	R	Active imported 3-phase energy for the current year (overflows number of register 7567, reset after 9999.9 MWh is reached)	100 MWh	√	√	√
6946/8946	7973	R	Active imported 3-phase energy for the current year (counter up to 9999.99 kWh)	kWh	√	√	√
6948/8948	7974	R	Active exported 3-phase energy for the current year (overflows number of register 7569, reset after 9999.9 MWh is reached)	100 MWh	√	√	√
6950/8950	7975	R	Active exported 3-phase energy for the current year (counter up to 9999.99 kWh)	kWh	√	√	√
6952/8952	7976	R	Active imported 3-phase energy for the current month (overflows number of register 7571, reset after 9999.9 MWh is reached)	100 MWh	√	√	√
6954/8954	7977	R	Active imported 3-phase energy for the current month (counter up to 9999.99 kWh)	kWh	√	√	√
6956/8956	7978	R	Active exported 3-phase energy for the current month (overflows number of register 7573, reset after 9999.9 MWh is reached)	100 MWh	√	√	√
6958/8958	7979	R	Active exported 3-phase energy for the current month (counter up to 9999.99 kWh)	kWh	√	√	√

6960/8960	7980	R	Active imported 3-phase energy for the current week (overflows number of register 7575, reset after 9999.9 MWh is reached)	100 MWh	√	√	√
6962/8962	7981	R	Active imported 3-phase energy for the current week (counter up to 9999.99 kWh)	kWh	√	√	√
6964/8964	7982	R	Active exported 3-phase energy for the current week (overflows number of register 7577, reset after 9999.9 MWh is reached)	100 MWh	√	√	√
6966/8966	7983	R	Active exported 3-phase energy for the current week (counter up to 9999.99 kWh)	kWh	√	√	√
6968/8968	7984	R	Active imported 3-phase energy for the current 48 hours (overflows number of register 7579, reset after 9999.9 MWh is reached)	100 MWh	√	√	√
6970/8970	7985	R	Active imported 3-phase energy for the current 48 hours (counter up to 9999.99 kWh)	kWh	√	√	√
6972/8972	7986	R	Active exported 3-phase energy for the current 48 hours (overflows number of register 7581, reset after 9999.9 MWh is reached)	100 MWh	√	√	√
6974/8974	7987	R	Active exported 3-phase energy for the current 48 hours (counter up to 9999.99 kWh)	kWh	√	√	√
6976/8976	7988	R	Active imported 3-phase energy for the current 24 hours (overflows number of register 7583, reset after 9999.9 MWh is reached)	100 MWh	√	√	√
6978/8978	7989	R	Active imported 3-phase energy for the current 24 hours (counter up to 9999.99 kWh)	kWh	√	√	√
6980/8980	7990	R	Active exported 3-phase energy for the current 24 hours (overflows number of register 7585, reset after 9999.9 MWh is reached)	100 MWh	√	√	√
6982/8982	7991	R	Active exported 3-phase energy for the current 24 hours (counter up to 9999.99 kWh)	kWh	√	√	√

* In 3-phase 3-wire system (3Ph/3W) respectively THD U12, THD U23, THD U31, THD U123

10 FIRMWARE UPGRADE

10.1 Firmware upgrade - of the main program of the meter

ND30PNET meters has an implemented feature that allows you to upgrade the software from a PC with the help of eCon software. Free eCon software and update files are available on manufacturer's website. Software update of the meter (firmware) can be performed via RS485 interface. The update is done in LUMEL UPDATER tab.

a)

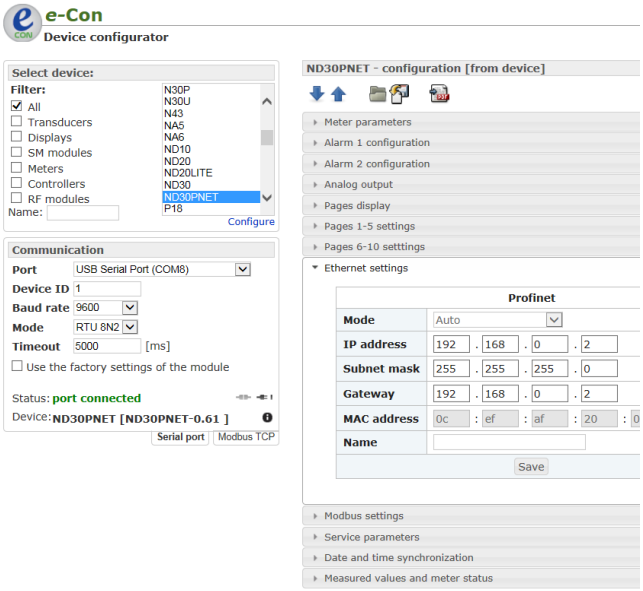

b)

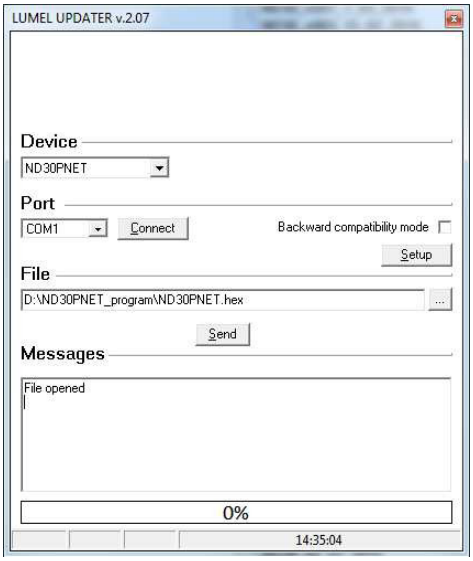

Fig.33. View of program window: a) eCon, b) firmware upgrade

Caution! After upgrading the software, the user should restore the factory settings of the meter, therefore it is recommended to preserve the initial meter parameters before upgrading it using eCon software. After starting eCon the serial port, speed, mode and meter address should be set in the settings. Then select ND30PNET meter and click *Configure*. To read all the settings, click the down arrow icon, then the floppy disk icon to save your settings to a file (you need to restore them later). After selecting *Update firmware* (in the upper right corner of the screen) *Lumel Updater* (LU) window will open - Fig. 33 b. Press *Connect*. *Messages* information window contains info about the progress of the upgrade process. When the port is properly opened the display shows: *Port opened*. Entering in the procedure of updating in the meter is done in two ways: remotely via LU (based on the settings in eCon - address, mode, speed, COM port) and by switching the power meter while pressing the button ↵ (while entering bootloader mode by pressing the button, the communication parameters: 9600, RTU8N2, address 1). The display shows *boot* with bootloader version, while LU shows the following message *Device found* and the name and version of the connected device. Press the button "*...*" and specify the update file of the meter. When the file is properly opened, the following message is displayed *File opened*. Press the button *Send*. After successful upgrade the meter switches to normal operation, and the information window shows *Done* and the upgrade duration. After closing LU window, go to the group of parameters *Service parameters*, select *Set the meter default parameters* and press the *Restore* button. Then press the folder icon to open the previously saved settings file, and press the up arrow icon to save the settings in the meter. The current software version can also be checked by reading the greeting messages of the meter after the power is turned on.

Caution! Turning off the power during the software upgrade may result in permanent damage to the device!

11 ERROR CODES

During the meter operation the display may show error messages. Causes of errors are shown below.

Error:

- MEMORY FR, - CAL INP, - CAL AN, - CAL Pt, - SD CARD – displayed when the memory in the meter has been damaged. The meter should be sent to the manufacturer.

- PAR.CFG – displayed when the operating parameters of the meter are incorrect. The factory settings should be restored (from the "Settings -> Factory settings" menu level or via RS485).

- PAR.PAGE – displayed when parameters related to the configuration of the displayed parameters in the meter are incorrect. Restore factory settings (from the menu "Display -> Settings -> Factory settings of pages" or via RS485).

- PAR.READ – displayed when parameters related to registers from the modbus 42xx address group are incorrect. The factory settings should be restored (from the "Modbus -> Factory settings reg. 42x" menu level or via RS485).

- ENERGY – displayed when an error occurs in the value of one of the energy meters. Restore the factory settings (from the "Parameters -> Energy count reset" menu or via RS485).

- ∧∧∧∧ **–** upper overrun. The value is measured outside the measurement range.
- ∨∨∨∨ **–** lower overrun. The value is measured outside the measurement range.

12 TECHNICAL DATA

Measurement ranges and permissible errors

Table 22

Measured quantity	Measurement range	L1	L2	L3	∑	Class
Current I: 1/5 A 1 A~ 5 A~	0.002 ..0.100..1.200 A 0.010 ..0.500.. 6.000 A ...100.00 kA (Ki ≠ 1)	•	•	•		0.2 (EN 61557-12)
Voltage U L-N: 57.7 V~ 110 V~ 230 V~ 400 V~	5.700..11.500 ..70.000 V 11.000..22.000 ..132.00 V 23.000..46.000 .. 276.00 V 40.000..80.000 .. 480.00 V ...1920.0 kV	•	•	•		0.2 (EN 61557-12)
Voltage U L-L: 100 V~ 190 V~ 400 V~ 690 V~	10.000 ..20.000..120.00 V 19.000 ..38.000..228.00 V 40.000..80.00 .. 480.00 V 69.000..138.00 .. 830.00 V ...1999.0 kV (tr_U≠1)	•	•	•		0.5 (EN 61557-12)
Active power P	-19999 MW .. 0.000 W .. ..19999 MW (tr_U≠1,tr_I≠1)	•	•	•	•	0.5 (EN 61557-12)
Reactive power Q	-19999 MVar .. 0.000 Var .. ..19999 MVar (tr_U≠1,tr_I≠1)	•	•	•	•	1 (EN 61557-12)
Apparent power S	0.000 .. 1999.9 VA .. ..19999 MVA (tr_U≠1,tr_I≠1)	•	•	•	•	0.5 (EN 61557-12)
Active energy EnP / imported or exported /	0.000 .. 99 999 999, 999 kWh				•	0.2S (EN 62053-22)
Reactive energy EnQ /Inductive or capacitive/	0.000 .. 99 999 999, 999 kVarh				•	1 (EN 61557-12)
Apparent energy EnS	0.000 .. 99 999 999, 999 kVAh				•	0.5 (EN 61557-12)
Active power factor PF	-1.00 .. 0 .. 1.00	•	•	•	•	1 (EN 61557-12)
Coefficient tgφ	-999,99...-1,20 .. 0 .. 1,20...999,99	•	•	•	•	1
Frequency f	45.000 ..65.00..100.000 Hz				•	0.1 (EN 61557-12)
Total harmonic distortion of voltage THDU, and current THDI	0.0 .. 100.0 %	•	•	•	•	5 (EN 61557-12)
Amplitudes of of the voltage Uh2 ...Uh51 , and current Ih2 … Ih51	0.0 .. 100.0 %	•	•	•		II (IEC61000-4-7)

tr_I - Ratio of current transformer = Primary current of transformer / Secondary current of current transformer,
tr_U - Ratio of voltage transformer = Primary voltage of transformer / Secondary voltage of voltage transformer,

Power consumption:

- in power supply circuit	≤6 VA
- in voltage circuit	≤0.5 VA
- in current circuit	≤0.1 VA

Readout field	color graphic screen TFT 3.5" with resolution of 320 x 240 pixels
Relay outputs (A1, A2)	2 programmable relays, volt-free NO contacts, load (resistive) 0.5 A/250 V a.c. or 5 A/30 V d.c. Number of switches: mechanical minimum 5×10^{6} electric minimum 1×10^{5}
Analog outputs (0 .. 20 mA)	1 output: 0… 20 mA (4…20mA) programmable. Resistance of load ≤400 Ω.Output voltage 10 V. Basic error 0.2 %.
Binary inputs (galvanically isolated) (B1, B2)	0 V d.c. – binary input inactive 5...24 V d.c. – binary input active
Inputs (T1, T2)	2 x Pt100, 2 – wire, -50 ..+400 °C, basic error 0.5 %
Serial interface RS485	Modbus RTU 8N2,8E1,8O1,8N1. Address 1..247, Baud rate 4.8, 9.6, 19.2, 38.4, 57.6, 115.2 kbit/s maximum time to commence response: 600 ms
Ethernet/Profinet interface	10/100 Base-T, RJ45 socket, ICMP (Ping), Profinet version 2.2
Sampling	A/C converter 16-bit Sampling rate 6.4 kHz for 50 Hz 7.68 kHz for 60 Hz Simultaneous sampling on all channels, 128 samples per period
Harmonics	Harmonics series (n) 1..51 Total harmonic distortion referred to the fundamental of the waveform of voltage THD, current THD (n=2..51) 0,0..100.0 % FFT analysis (Fast Fourier Transform),
Real time clock	±20 ppm, battery of RTC CR2032

Terminals

Cross-section	0.05 .. 2.5 mm²
Terminal screws	M3
Tightening torque	0.5 Nm Degree of protection provided by the housing
from the front side	IP 65

terminals IP 20

Weight 0.3 kg

Dimensions 96 x 96 x 77 mm

Reference conditions and rated operating conditions

- power supply 85..253 V a.c. (40..50..400) Hz or 90..300 V d.c.
  or 20..40 V a.c. or 20..60 V d.c.
- input signal: 0 .. $0.1..1.2I_n$; 0,1..$0.2..1.2U_n$ for current, voltage, PF_i ,tg_i
  frequency 45 ..50 .. 60 ..100 Hz; sinusoidal (THD ≤ 8%)
- power factor -1...0...1
- ambient temperature -10..23..+55 °C, class K55 acc. to EN61557-12
- storage temperature -20..+70 °C
- humidity 0 .. 40 ..60 ..95 % (no condensation)
- acceptable crest factor:
- current 2
- voltage 2
- external magnetic field ≤ 40...400 A/m d.c.
  ≤ 3A/m a.c. 50/60 Hz
- short-term overload

voltage inputs	5 sec.	2 Un
current inputs	1 sec.	50 A

- operation position any
- warm-up time 15 min.
- **Real-time clock battery:** CR2032

Additional errors:

in % of basic error

- due to ambient temperature changes < 50 % / 10 °C
- for THD > 8% < 50 %

Standards fulfilled by the meter Electromagnetic Compatibility:

- immunity in industrial environments EN 61000-6-2
  immunity to the induced common voltages of radio frequency
  - level 2 in the frequency range of 0.15 .. 1 MHz,
  - level 3 in the frequency range of 1 MHz .. 80 MHz,
- noise emission acc. to EN 61000-6-4

Safety requirements:

according to EN 61010-1 standard

- insulation between circuits: basic,
- installation category III for voltages up to 300V in relation to earth
- installation category II for voltages up to 600V in relation to earth

- degree of pollution 2
- maximum operating voltage relative to earth
  - for power and relay outputs circuits 300 V
  - for measurement input 500 V
  - for RS485, PROFINET circuits, analog outputs, temperature and binary inputs: 50 V
- altitude < 2000m

13 ORDERING CODES

Ordering code of ND30PNET meter of power network parameters.

Table 23

Meter	**ND30PNET**	**X**	**X**	**X**	**XX**	**X**	**X**
Input voltage (phase/phase-to-phase) Un:							
3x57.7/100 V, 3x 230/400 V		1					
3X110/190 V, 3 x 400/690 V		2					
Additional outputs/inputs:							
2 relays			1				
2 relays, 1 analog output, 2 Pt100 inputs			2				
2 relays, 1 analog output, 2 binary inputs			3				
Power supply:							
85..253 V a.c., 90..300 V d.c.				1			
20..40 V a.c., 20..60 V d.c.				2			
Versions:							
standard					00		
special*					XX		
Language							
Polish/ English						M	
other*						X	
Acceptance tests:							
without additional requirements							0
with quality inspection certificate							1
with calibration certificate							2
acc. to customer's requirements*							X

*after agreement with the manufacturer

SAMPLE ORDER, code **ND30PNET 12100M0** means:

ND30PNET – meter ND30PNET,
1 – input voltage 3 x 57.7/100 V, 3 x 230/400 V,
2 – 2 relays, 1 analog output 0..20 mA, 2 Pt100 inputs
1 – power supply 85..253 V a.c., 90..300 V d.c.
00 – standard version,
M – Polish/English language version,
0 – without extra requirements.

ND30PNET-09B